Institute of Nuclear Physics

E.A.ABRAMYAN

HIGH-CURRENT TRANSFORMER ACCELERATORS

Novosibirsk
1970

Institute of Nuclear Physics

E.A.ABRAMYAN

HIGH-CURRENT TRANSFORMER ACCELERATORS

Novosibirsk
1970

Summary

The principles and designs of transformer accelerators (TA) generating intense beams of charged particles over energy ranges 0,5-5 Mev are described.

Pulse electron accelerators with pulse length of 10^{-8}-10^{-5}sec are investigated (some have repetition rates of several hundred per second) as well as one-phase and three-phase 50-Hz transformers.

The power conversion efficiency of most models is 60-95 %, the average beam power is greater than 10 kW and is in excess of 150 kW for one of the last models. The designs of a 5 Mev single pulse TA with peak current 30 kA and pulse length 40 nsec and of a 1,2 MeV proton TA with average beam power 10 kW are described.

The features of the main components of high voltage transformers and of intense current acceleration tube are discussed.

The utilization of high current beams and the future development of TA's are considered.

1. Introduction

Among systems based on known dc principles of charged particle acceleration, the most effective ones seem to be those using high voltage transformers. Having power conversion efficiencies close to 100 %, the transforming power capacity of these systems has in principle no limit. Systems working at 50/60 Hz may be operated from industrial mains at conventional voltages. Others, working at higher frequencies, are considerably more compact but demand auxiliary converters and have smaller power conversion efficiencies.

There are two basic principles for obtaining dc voltages in such systems. First, in ICT each of the multiple secondaries is insulated from the others and has its own rectifiers /1/. The individual dc outputs are connected in series to give the resulting dc voltage. Second, in the 1-phase transformer accelerators (TA) the only rectifying element is the acceleration tube itself, with the high voltage being kept constant automatically by beam current modulation /2/. In a pulsed TA, as in a resonance transformer /3/, the desired energy homogeneity of the accelerated beam is obtained by adjusting the pulse length /2/.

The high-current accelerators based on the transformer principle have a wide scope of applications. Electron beams with power of tens of kilowatts have brought into being a wide variety of completely new and extremely effective technological processes in radiation chemistry, metallurgy, food processing, medicine, etc. Accelerators for industrially oriented applications must be of a simple construction and high power conversion efficiency to meet the requirements of high beam power, reliability, ease of maintenance and cost.

Acceleraters based on the transformer principle are at present the most efficient ones for energies up to 3-4 MeV and they may become the only profitable ones in the future when powerful beams will be obtained at hundreds and thousands of kilowatts and at a considerably reduced cost per kWh of output.

In addition to many questions involving transformer design itself, e.g. high voltage insulation and rectification, there are other problems which are associated directly with the accelèration tube, such as questions of the tube electric strength and electron optics of intense beams. However, the development in recent years of inclined field tubes /4/ with strongly focusing beam optics /5/ allows us to hope that essential progress is possible in generating higher currents of electrons, protons and heavier particles.

This preprint reviews the activity in designing powerful TA's as well as some portable TA's for special needs. Main attention is given to electron accelerators with energies in the range of 0.5-3 MeV and average beam power of several tens of kilowatts. A few types of TA have been completed and operated. Specifically 1-phase TA's now work at 50/60 Hz and operate from industrial mains at a conventional voltage. Pulsed TA's are powered by special rectifiers and extra commutators. The main pulsed TA models are designed for a high repetition rate so that average powers of beam outputs are also high enough. Also a single pulse TA generating intense bursts of electron current has been designed on the pulsed transformer principle.

An investigation of different strong focusing systems installed inside acceleration tubes has been carried out. Electron currents up to 10-20 A and proton currents up to 80 mA have been obtained in such acceleration tubes. Other tubes with current pulses in excess of 100 A with pulse lengths in the range 10^{-8}-10^{-5}sec at a repetition rate of 100 sec^{-1} and higher have been developed as well.

This paper reviews investigations in recent years of accelerators based on the transformer principle. Utilization of high current beams and future developments in TA design are considered.

2. TA operating principles

Pulsed TA

In this case transformers with shock excitation are used as voltage supplies (Fig.1) /6/.

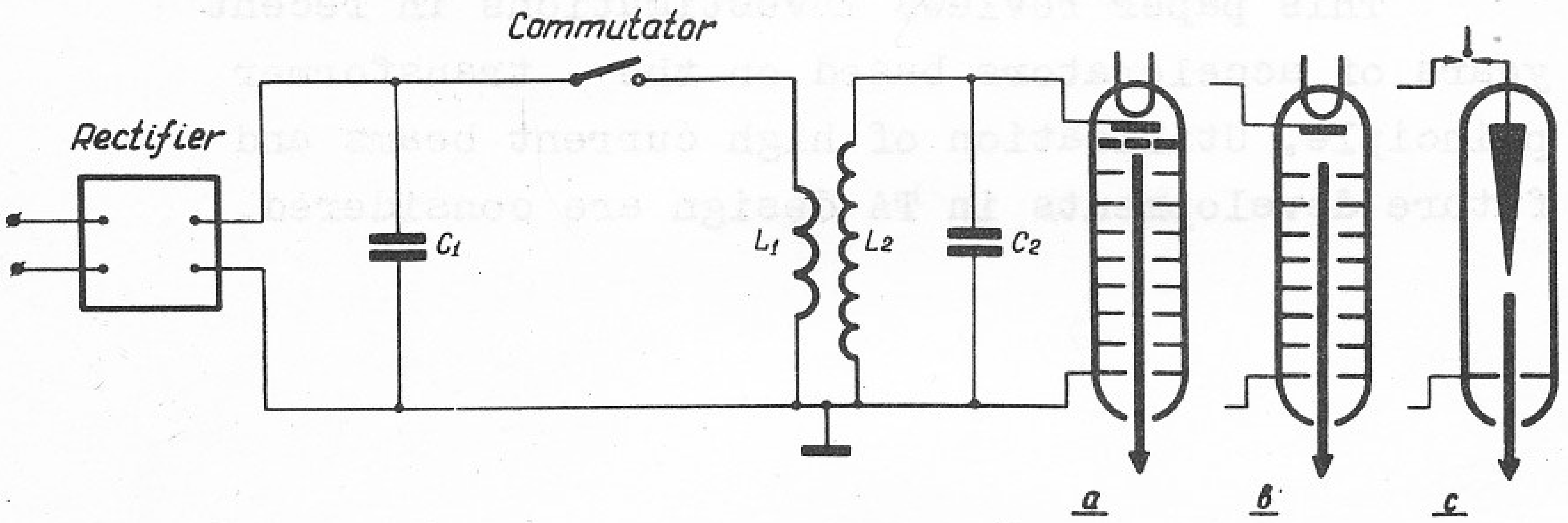

Fig.1. Equivalent circuit of pulsed TA.

The natural frequencies of the primary and secondary circuits of the transformers are equal: $C_1L_1=C_2L_2$ where C_1 is a primary circuit capacitor charged by a rectifier before the operating pulse, C_2 is distributed capacitance of the transformer secondary circuit and L_1 and L_2 are the inductances of the primary and secondary circuits. After switching the capacitor C_1 to the primary winding, the energy stored in C_1 is transferred to C_2. For larger Q-factors of the circuits (Q_1 and Q_2) and for larger coupling coefficients K, fewer oscillation cycles are needed for the voltage of C_2 to reach its maximum.

Transformers with shock excitation (Tesla-transformers)were used for particle~~s~~ acceleration in the 1930s /7/, but the lack of high quality insulators at the time and quite a number of construction difficulties did not permit achievement of coupling coefficients K greater than 0,1-0,2. Such high energy loss made it difficult to obtain high voltage at the secondary circuit terminal and this was one of the reasons further development of this kind of accelerator was abandoned.

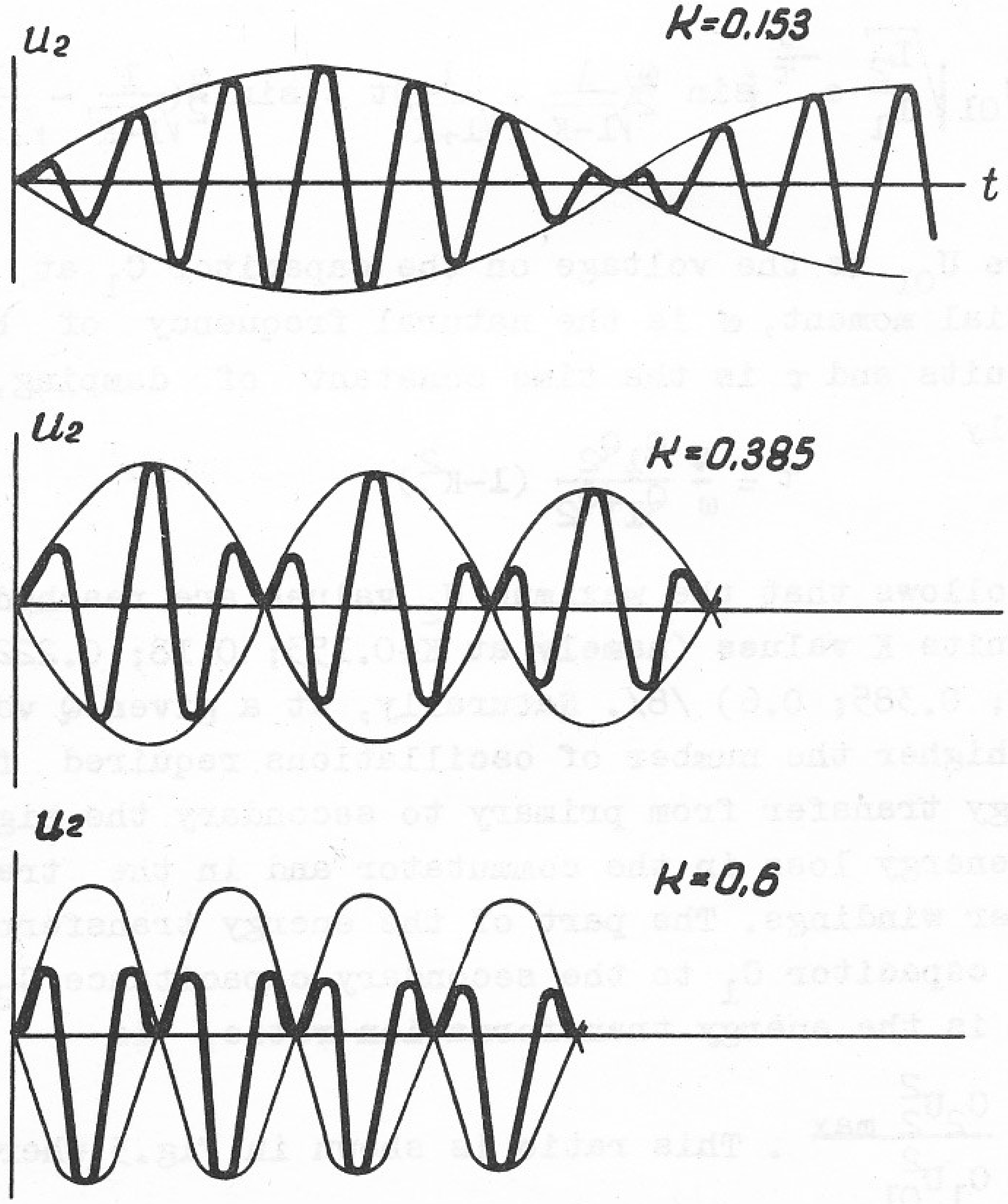

Fig.2. Time variation of secondary circuit voltage for different coupling coefficients.

The TA's described below have K in the range 0.4–0.6. This together with other advances make the principles of TA seem very promising today.

Fig.2 shows the variation with time of the secondary voltage U_2 for different values of K. U_2 already reaches the maximum value in the case K=0.385 at the third half-wave and in the case K = 0.6 reaches it at the second half-wave. The U_2 time variation depends on a few transformer parameters:

$$U_2 = U_{01}\sqrt{\frac{L_2}{L_1}}\, e^{-\frac{t}{\tau}} \left\{ \sin \frac{\omega}{2}\left(\frac{1}{\sqrt{1-K}} + \frac{1}{\sqrt{1+K}}\right)t + \sin \frac{\omega}{2}\left(\frac{1}{\sqrt{1-K}} - \frac{1}{\sqrt{1+K}}\right)t \right\}$$

where U_{01} is the voltage on the capacitor C_1 at the initial moment, ω is the natural frequency of both circuits and τ is the time constant of damping, namely

$$\tau = \frac{4}{\omega}\,\frac{Q_1 Q_2}{Q_1 + Q_2}\,(1-K^2)$$

It follows that the maximum U_2 values are reached at definite K values (namely at K=0.153; 0.18; 0.222; 0.28; 0.385; 0.6) /8/. Naturally, at a given Q value the higher the number of oscillations required for energy transfer from primary to secondary the higher the energy loss in the commutator and in the transformer windings. The part of the energy transferred from capacitor C_1 to the secondary capacitance C_2, that is the energy transformation ratio, is

$\varkappa = \dfrac{C_2 U_{2\,max}^2}{C_1 U_{01}^2}$. This ratio is shown in Fig.3 where a useful parameter $Q = 2\,\dfrac{Q_1 Q_2}{Q_1 + Q_2}\,(1-K^2)$ is plotted horizontally. For instance in the case $K=0.6$ and $Q_1=Q_2=50$ about 90% of the energy stored in C_1 initially is transferred to the secondary circuit.

In all pulsed TA which have been developed by us natural frequencies of transformer circuits (ω) amount to several tens of kHz and the time interval from the moment of switching the commutator to the

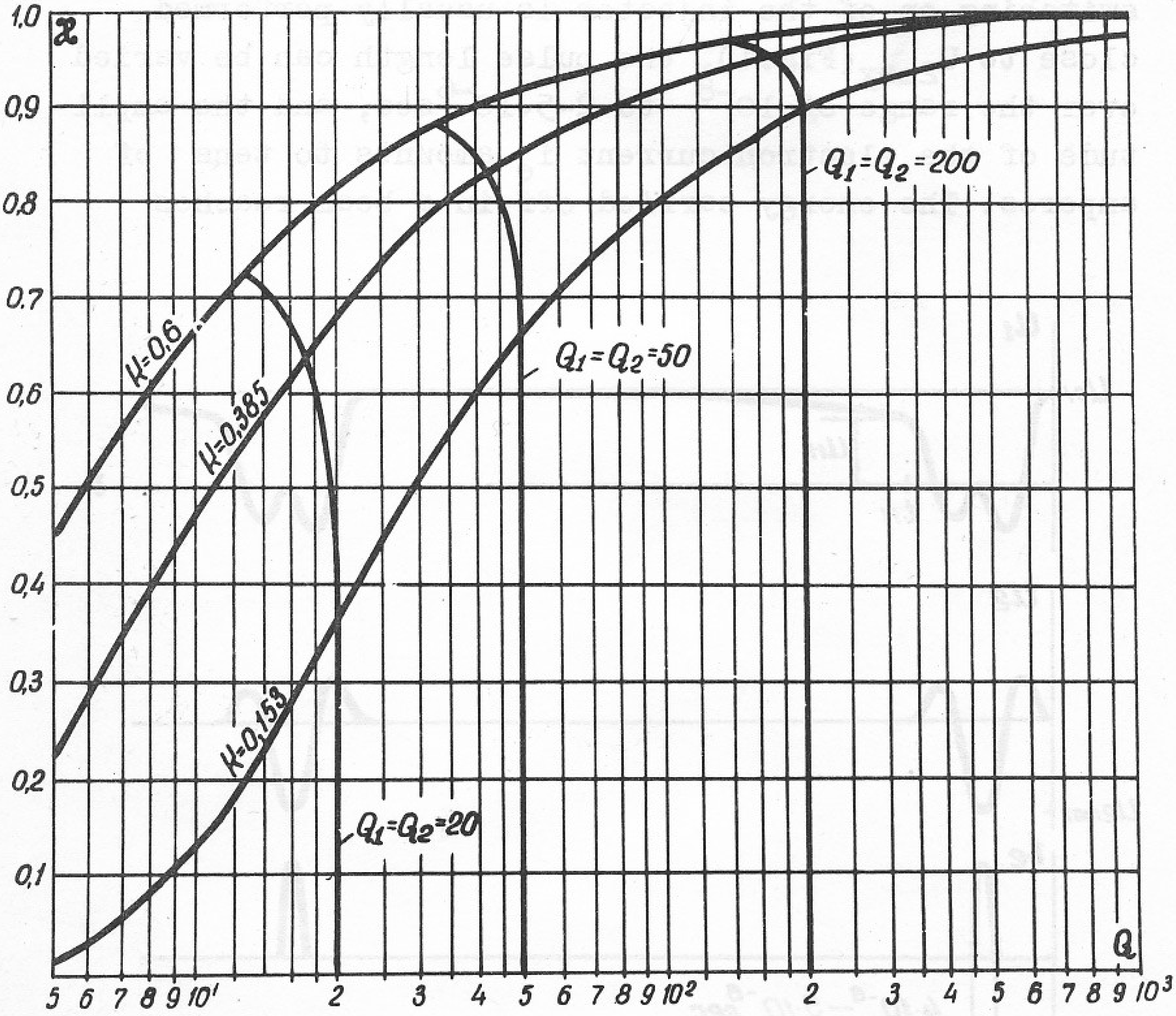

Fig.3. Energy transformation ratio $\varkappa$ versus conventional Q-factor of the system.

moment when U_{2max} is reached is in the range 10-20μsec. The U_{01} voltage is usually chosen to be in the range 10-50 kV, and the energy transformation ratio reaches 100-150. An acceleration tube often is connected directly to the secondary winding (types a and b of Fig.1). In the case of a-type systems the moment of switching on the current and the pulse length can be regulated by the control grid of the injector. The switching on of the injector is usually performed close to U_{2max}(Fig.4), the pulse length can be varied over the range of 10^{-8} to $2-5\cdot10^{-6}$sec, and the amplitude of the electron current i_e amounts to tens of amperes. The energy carried off in a beam reaches

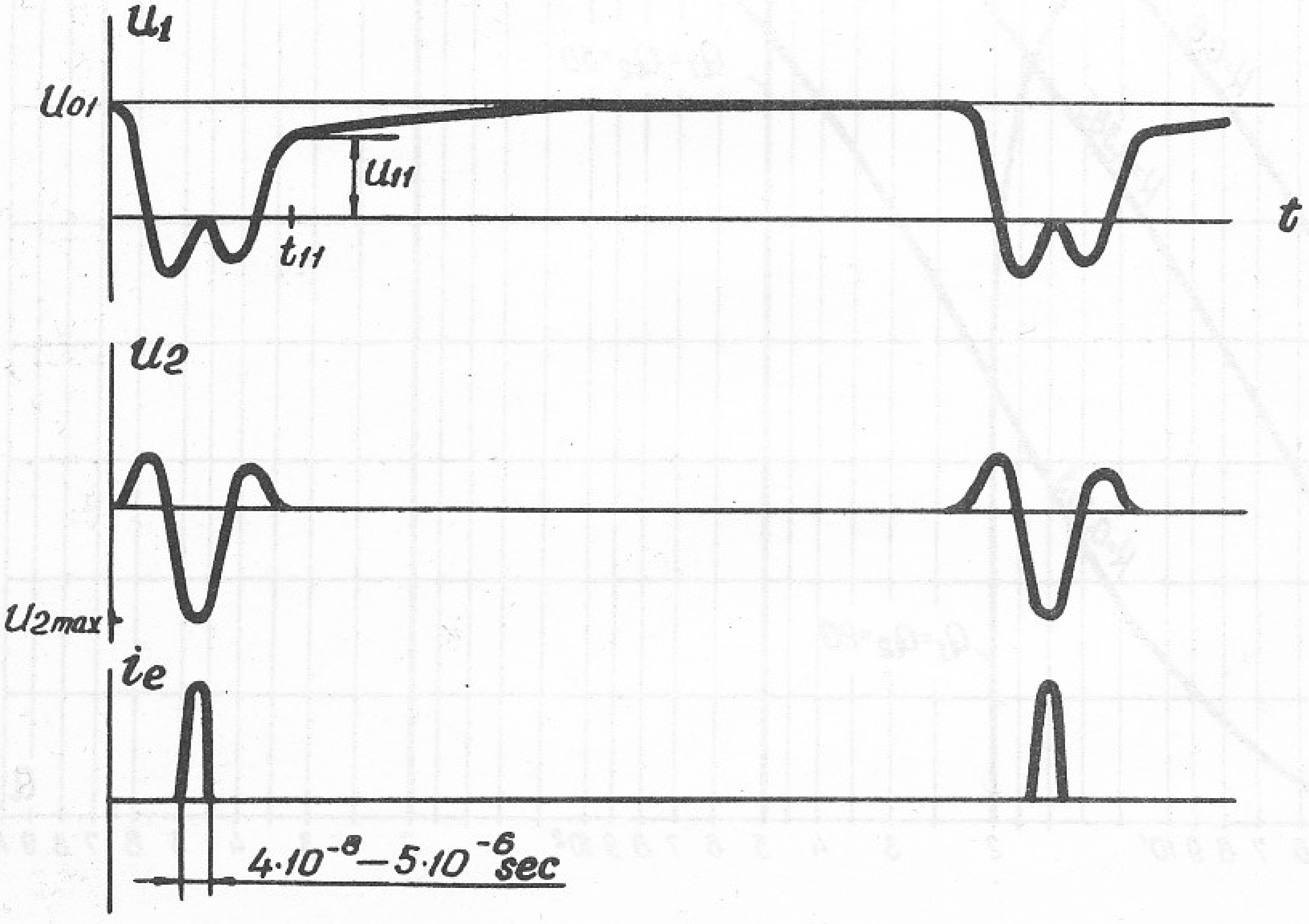

Fig.4. Operation diagram TA with energy recuperation.

50-70 % of the energy stored in C_2:

$$\int i_e U_2 dt = 0.5 \div 0.7 \, \frac{C_2 U_{2max}^2}{2}$$

After an operating pulse the remaining energy is stored again in C_1 at the time t_{11}. In a great number of models a commutator of the primary circuit is switched off just at the moment t_{11} so that no current passes through the commutator and the energy returned to C_1 is held for the following pulse. After C_1 is again charged to U_{01} (Fig.4) the system is ready for the next operating pulse. The repetition rate may reach several hundreds Hz and the power conversion efficiency is in the range 60-70 %.

In the remainder of this article, we shall continue to use the term efficiency to mean the ratio of the beam power to the power which is being taken from the main by the TA including power loss in the rectifier as well, if we are treating a pulsed TA. But the power which supplies control and measuring devices, vacuum pumps and the cooling system is not taken into account. In the pulsed TA case the power conversion efficiency is a ratio of accelerator beam power to the rectifier input power averaged over many cycles.

The processes taking place after the beam current pulse i_e is terminated are quite similar to those at the beginning of the operating cycle. In the initial operating cycle the energy which has been stored in C_1 is transferred to C_2; following the pulse output, the remaining energy in C_2 is returned to C_1. Ohmic loss in transferring energy to C_1

also depends on K, Q_1 and Q_2. In the case of TA's working in no-load conditions (there is no pulse of accelerated particles) the part of the energy returned from C_2 to C_1 is $\frac{C_1U_{11}^2}{C_2U_{2max}^2}$ and is represented by curves similar to those of Fig.3. The ratio of the final C_1 energy after a no-load cycle to the initial one is $\nu = \frac{C_1U_{11}^2}{C_1U_{01}^2}$ which is called the recuperation ratio. The operating cycle shown in Fig.4 is one with energy recuperation. The dependence of $\varkappa$ and ν on coupling coefficient K is shown in Fig.5 for the case of a system without energy loss (the Q-factor is infinite, there is no current pulse produced). The dependences of currents in the primary and secondary windings for the case K=0.6 are shown in Fig.6.

In TA's with an injector with control grid (Fig.1a), if an energy spread of 10-15 % in the beam is permitted, the time of acceleration may be ¼ to 1/3 of the accelerating voltage pulse duration.

In a-type TA's it is possible to get wide current pulses with an energy spread smaller than 1-2% by controlling the tube current i_e to conform to the form shown in Fig.7. The waveform $i_e(t)$ is found by solving the following set of two coupled circuit equations for the time interval during which the current pulse i_e is produced ($t_1 < t < t_2$) keeping U_2 constant:

$$U_1 = L_1\frac{di_1}{dt} + M\frac{di_e}{dt}, \quad U_2 = L_2\frac{di_e}{dt} + M\frac{di_1}{dt} = \text{const},$$

$$i_1 = C_1\frac{dU_1}{dt}$$

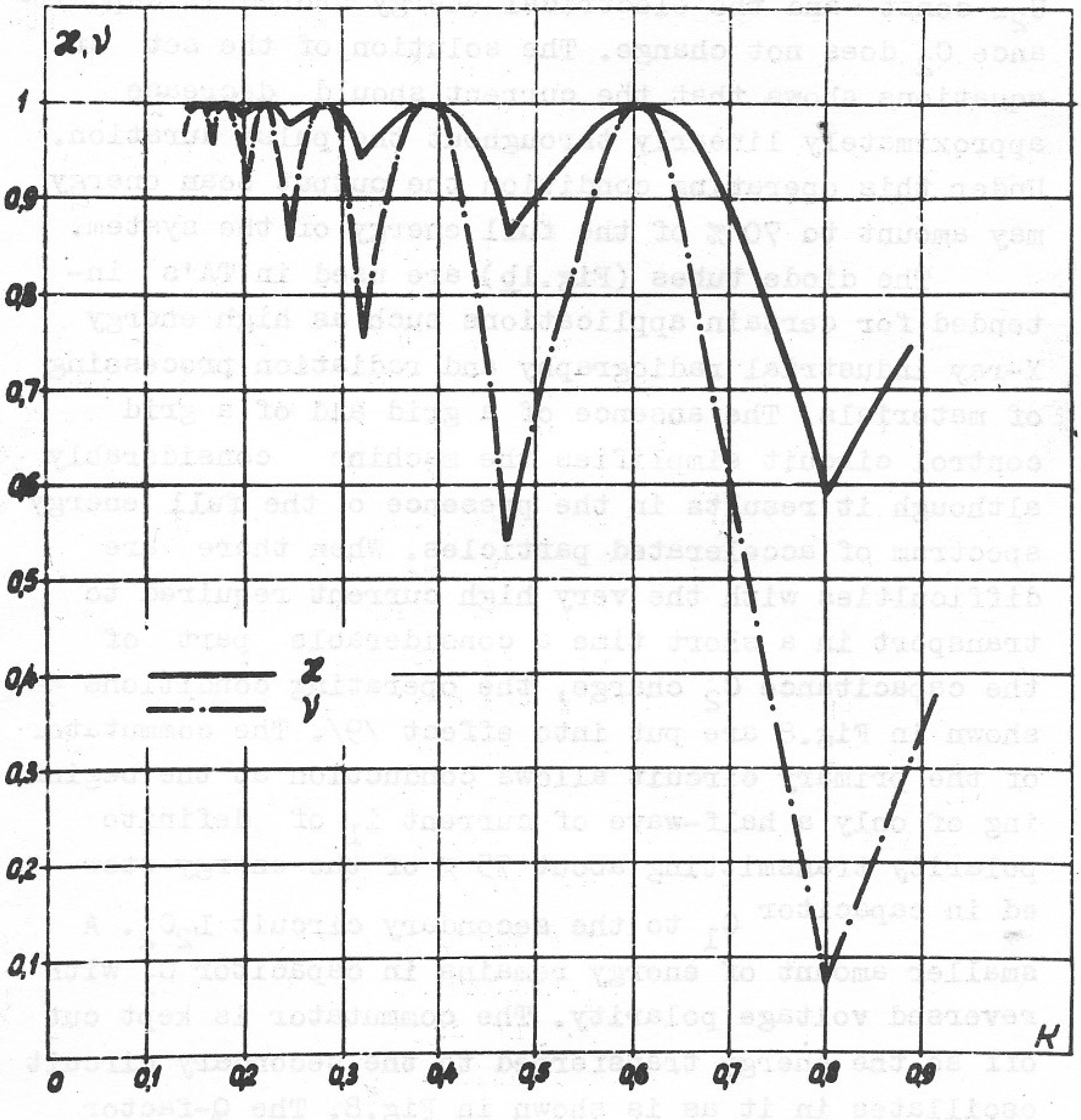

Fig.5. Energy transformation ratio ϰ and recuperation ratio ν versus coupling coefficient K.

During the entire time of acceleration, $i_e = i_2$ as $U_2 =$ const and the electrical energy stored in capacitance C_2 does not change. The solution of the set of equations shows that the current should decrease approximately linearly throughout the pulse duration. Under this operating condition the output beam energy may amount to 70 % of the full energy of the system.

The diode tubes (Fig.1<u>b</u>) are used in TA's intended for certain applications such as high energy X-ray industrial radiography and radiation processing of materials. The absence of a grid and of a grid control circuit simplifies the machine considerably although it results in the presence of the full energy spectrum of accelerated particles. When there are difficulties with the very high current required to transport in a short time a considerable part of the capacitance C_2 charge, the operating conditions shown in Fig.8 are put into effect /9/. The commutator of the primary circuit allows conduction at the beginning of only a half-wave of current i_1 of definite polarity transmitting about 75 % of the energy stored in capacitor C_1 to the secondary circuit L_2C_2. A smaller amount of energy remains in capacitor C_1 with reversed voltage polarity. The commutator is kept cut off so the energy transferred to the secondary circuit oscillates in it as is shown in Fig.8. The Q-factor of the secondary circuit is as a rule high enough - $Q_2 = 100 - 150$ and higher - so the ohmic loss in a few oscillation cycles is small. At the same time electrons are accelerated at every oscillation cycle when there is the proper polarity of U_2. When the electron beam has carried out a significant fraction of the secondary circuit energy the commutator of the primary circuit is switched on again and allows conduction for a half-wave of a reverse polarity current. Thus the capacitor C_1 voltage reverses its polarity once more. In the time interval between operating cycles the capacitor C_1 remains charged to the initial voltage U_{01}.

In all cases which have been considered circuits have employed standard hydrogen thyratrons with a rated voltage of 20-35 kV. Some types of circuits have been described in the literature /10,11/.

A transformer with a shock excitation may also be used for charging the high-voltage capacitor C_2 which is subsequenly connected to the tube with a field emission cathode (Fig.1c) /12/. The primary voltage in this case does not exceed 50-100 kV, the C_2 voltage comes up to 5-7 MV, and the capacitance charging time is about 20 μsec. After C_2 is switched on to the

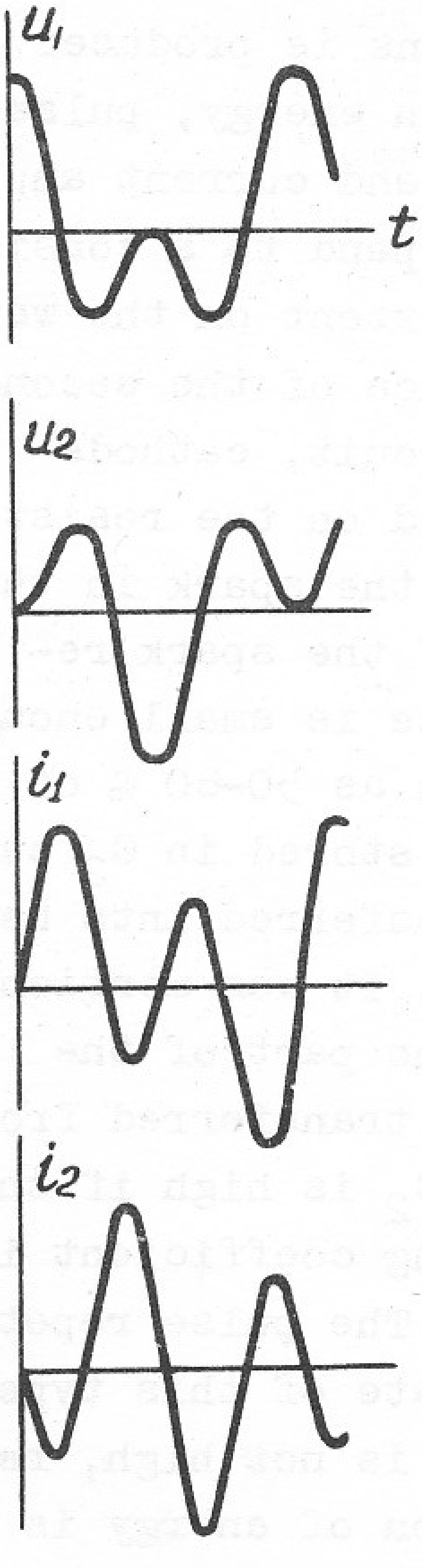

Fig.6. Voltages and currents in primary and secondary for K=0.6.

acceleration tube by a triggered gap, a current pulse of accelerated electrons is produced. Electron energy, pulse length and current amplitude depend to a considerable extent on the wave impedance of the secondary circuit, cathode area and on the resistance of the spark in the gas. If the spark resistance is small enough, as much as 50–60 % of the energy stored in C_2 can be transferred into beam energy. It was mentioned that the part of the energy transferred from C_1 to C_2 is high if the coupling coefficient is large. The pulse repetition rate of this type of TA is not high, recuperation of energy is not performed and an air gap can be used as a primary circuit commutator.

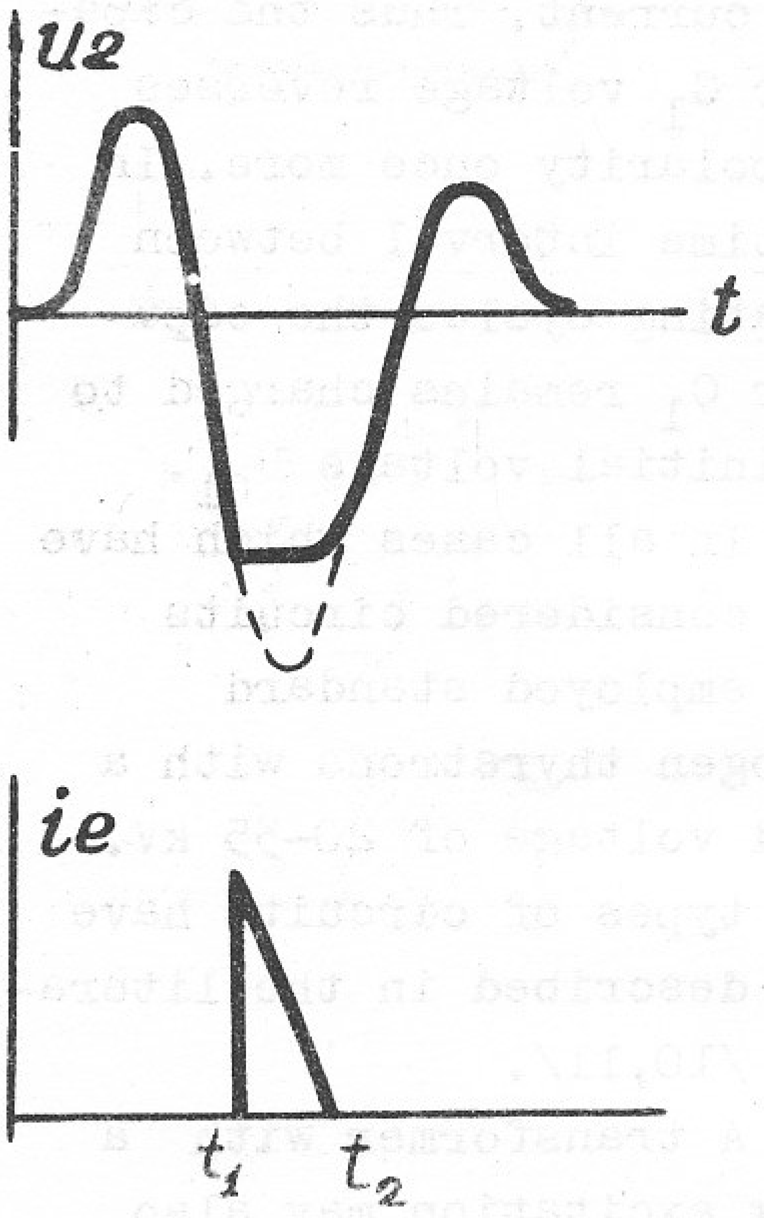

Fig.7. Tube voltage and current when a beam with homogeneous energy is accelerated.

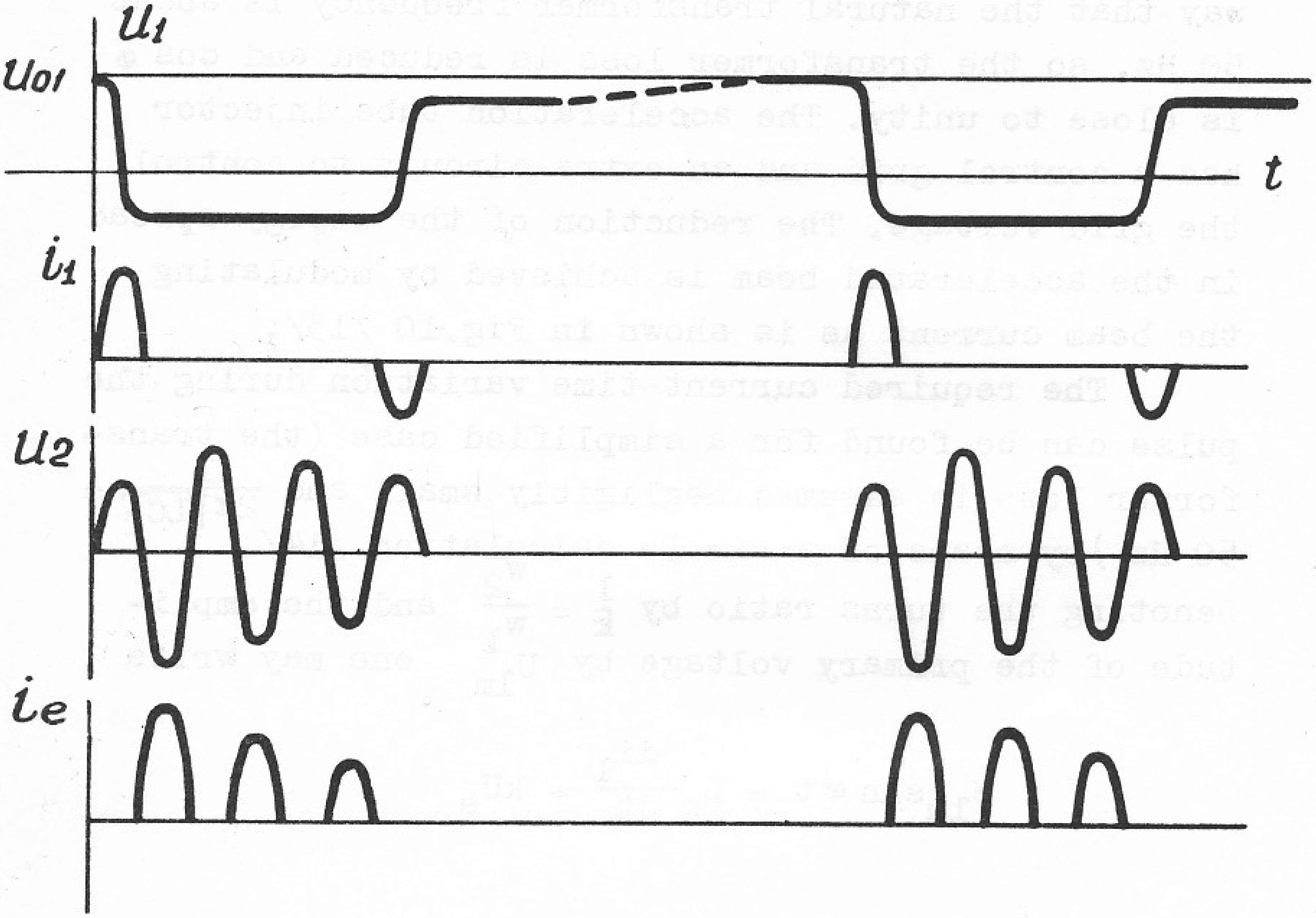

Fig.8. Pulse train acceleration in a diode tube.

Industrial frequency TA

The electrical circuit of a single-phase TA is shown in Fig.9. In this type of TA the primary circuit is supplied by a 50/60 Hz main at 220/380 V. The maximum voltage in the secondary circuit is 3 MV. L_s is a stray inductance, L is the transformer secondary inductance and C_2 is a self (distributed) direct-to-ground capacitance of the secondary circuit. The number of secondary winding turns w_2 and the geometrical dimensions of a machine are chosen in such a way that the natural transformer frequency is about 50 Hz, so the transformer loss is reduced and cos φ is close to unity. The acceleration tube injector has a control grid and an extra circuit to control the grid voltage. The reduction of the energy spread in the accelerated beam is achieved by modulating the beam current as is shown in Fig.10 /13/.

The required current-time variation during the pulse can be found for a simplified case (the transformer loss is assumed negligibly small and $\frac{1}{2\pi\sqrt{LC_2}} =$ 50 Hz) by means of a simple calculation /14/. Denoting the turns ratio by $\frac{1}{k} = \frac{w_2}{w_1}$ and the amplitude of the primary voltage by U_{1m} one may write

$$U_{1m} \sin \omega t = L_s \frac{di_1}{dt} + kU_e$$

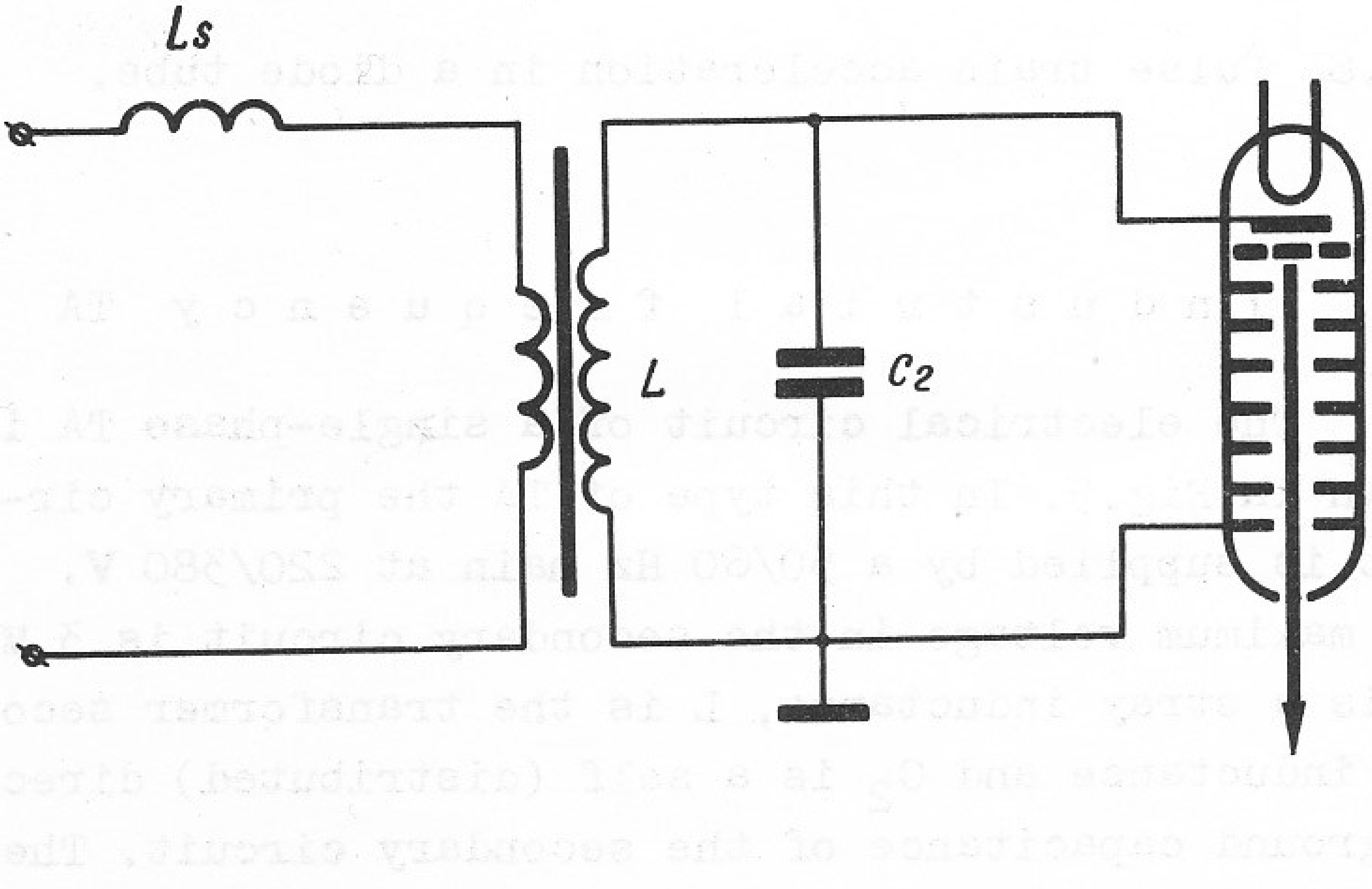

Fig.9. Equivalent circuit of a single-phase TA.

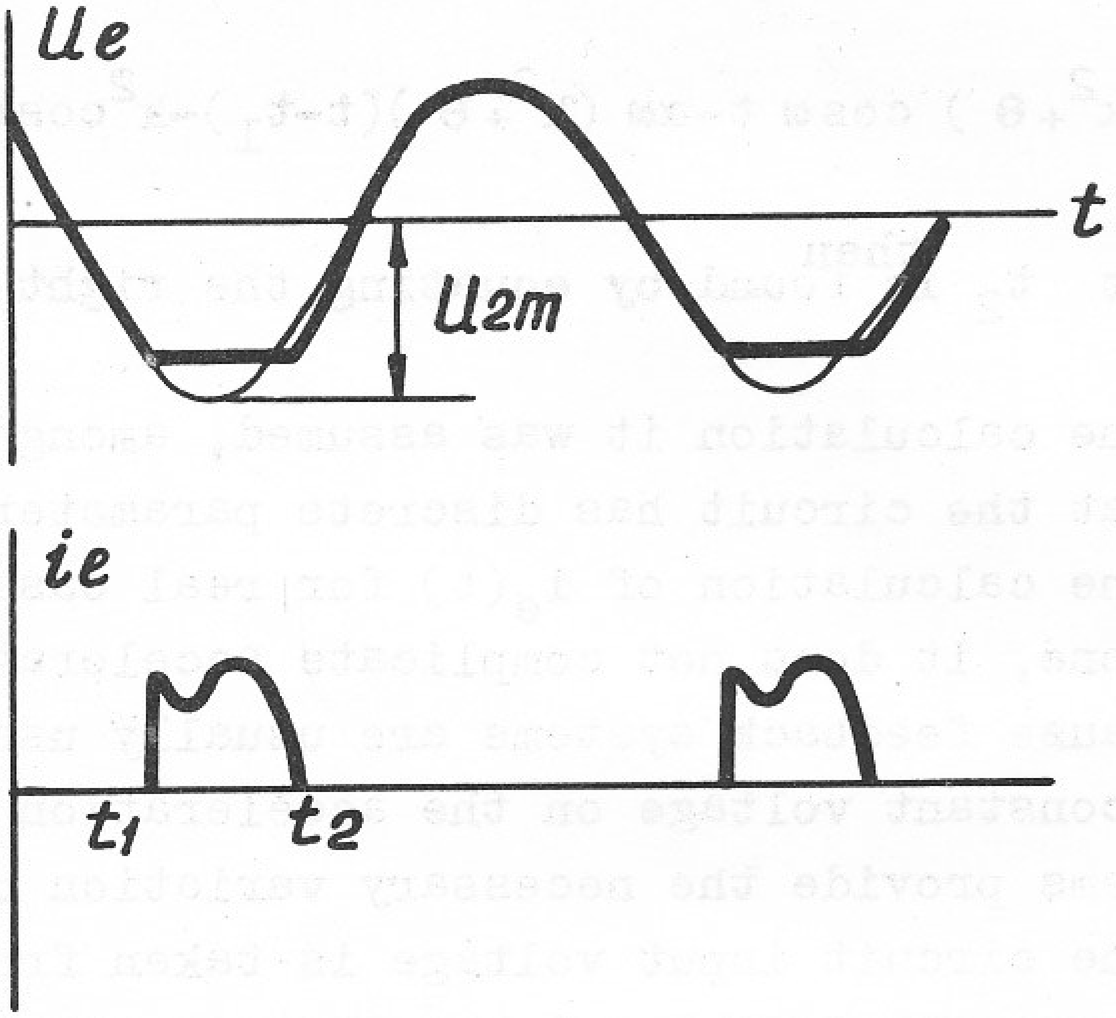

Fig.10. Voltage and current in a single-phase TA acceleration tube. U_2 is acceleration tube voltage, i_e is beam current.

This equation is solved for the time interval $t_1 < t < t_2$ with $U_e = L \frac{di_L}{dt}$ = const. Then the current through the inductance is $i_L = \frac{U_e}{L}(t-t_1) + i_L(t_1)$. The variable $i_L(t_1)$ is to be found for the open circuit case: $i_L(t_1) = -\frac{U_{2m}}{\omega L}\cos \omega t_1$, where U_{2m} is the amplitude of the secondary voltage. The capacitance C_2 voltage is also constant during the time interval under consideration and the tube current $i_e = ki_1 - i_L$.

Call $\alpha = \frac{U_e}{U_{2m}} = \sin\omega t_1$ and $\theta = \frac{L_s}{L}$ and write the time variation of the accelerating beam current as

$$i_e = \frac{U_{2m}}{\omega L_s}\left[(k^2+\theta)\cos\omega t - \alpha\omega(k^2+\theta)(t-t_1) - k^2\cos\omega t \right]$$

The instant t_2 is then found by equating the right hand side to zero.

In the calculation it was assumed, among other things, that the circuit has discrete parameters. Although the calculation of $i_e(t)$ for real cases is an elaborate one, it does not complicate accelerator design because feedback systems are usually used for providing constant voltage on the acceleration tube; these systems provide the necessary variation of tube current. The circuit input voltage is taken from a divider across the output and the control supplies the control grid (or the control electrode) of the injector. The pulse length $t_2 - t_1$ may be changed over the range from zero (open circuit conditions) to 6-7 msec. Only the instant of control circuit switching on (t_1) is given from the control board, and after that the system works automatically. The maximum pulse length is determined by the value of allowed inverse tube voltage U_{2m} which, with $t_2 - t_1 = 6\text{-}7$ msec, exceeds by 15-20 % the tube voltage during a pulse. This has little practical effect on the electrical strength of the accelerator for the tube can withstand higher voltage when the beam and associated radiation are off. In the long pulse operating condition the ratio of peak current and power to the average values is approximately 6. For example the 1.3 MeV, 15 kW average power electron TA has peak power of 90 kW and peak current of 70 mA. The acceleration of such intense electron beams is relatively simple to perform in tubes with the strong focusing magnetic systems to be described.

The uniformity of the energy of the accelerated particles depends on the care taken in the control system. A TA used for irradiation technology provides uniformity of about ± 0.5 %. It is possible to attain the desired time variation $U_e(t)$ by setting up a program in the grid control system. Variation of the current pulse length is then used mainly to change the average power of the accelerated beam.

Using single-phase transformers it is difficult to get powers higher than 50 kW. The uneven loading of the main may be reduced by switching on several TA's at successive times to different phases. This is possible in industry where many TA's operate at the same time.

For accelerating beams of hundreds and thousands of kW, the utilization of 3-phase TA is indicated. One of these types under current development has the equivalent electrical circuit shown in Fig.11. The transformer primary is supplied by a conventional 3-phase 50/60 cps main. The ripple of the tube voltage is in the range ±3 %. It is possible to use an injector with controlled current and beam current modulation for regulation of the tube voltage as has been described. The current in the rectifiers is 120 % of the tube beam and the rectifiers inverse voltage exceeds by 5 % the tube voltage. Parameters of the first model are: tube voltage 1.2 MV, beam power 150 kW. Compact electric vacuum diodes developed by us have the desired performance (allowed inverse voltage 1.26 MV, peak current 150 mA) and are now undergoing operating tests.

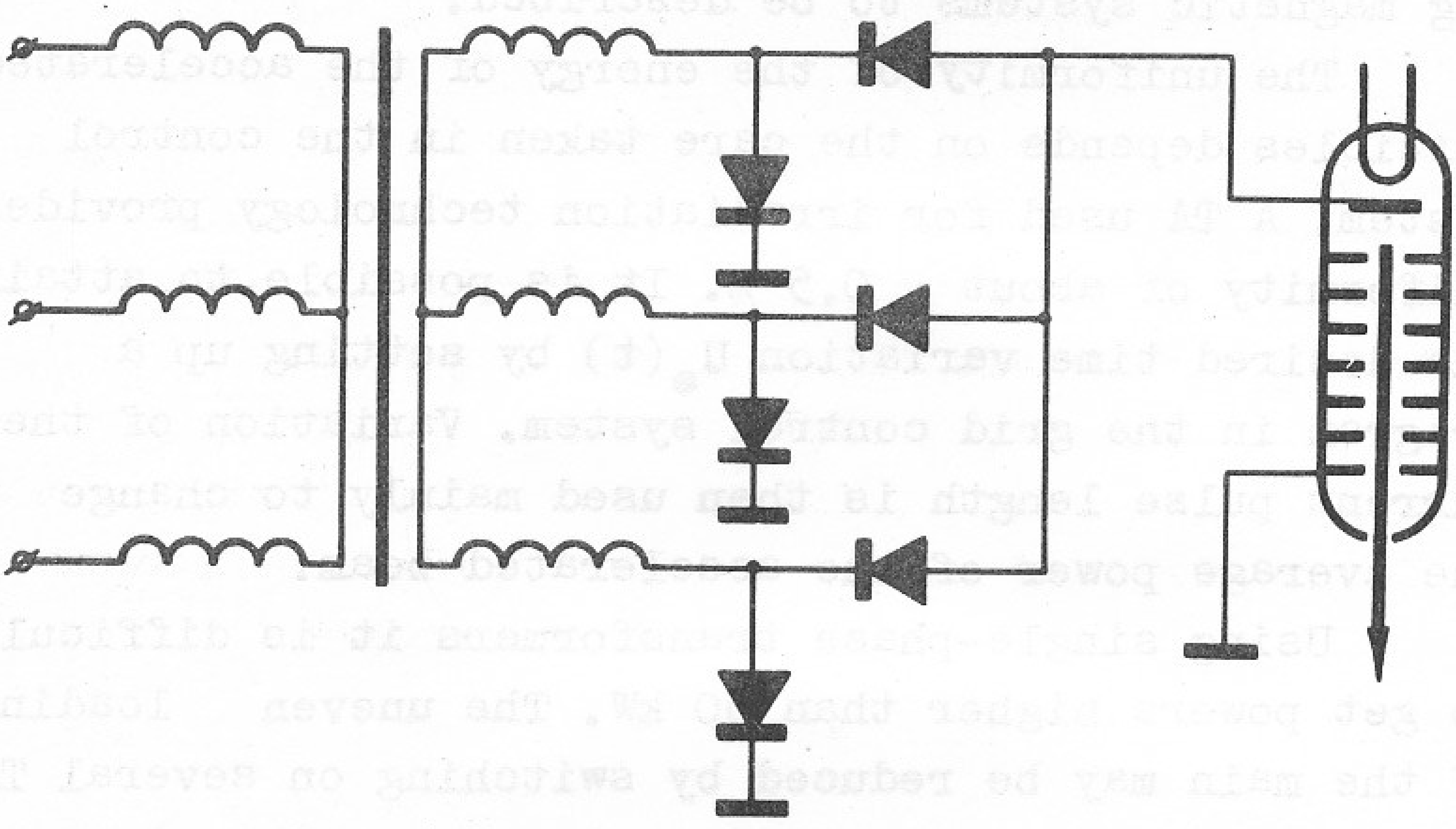

Fig.11. Equivalent circuit of 3-phase TA.

3. Transformer design

Pulsed TA

The designs of pulsed TA's are remarkable for their relative simplicity /15/. The primary and secondary windings are arranged coaxially (2 and 3 in Fig.12). The secondary terminates at the high potential terminals 5 and 5a. The accelerator is housed in a tank filled with a high electric strength medium - usually SF_6 or a mixture of SF_6 and nitrogen. The primary consists of only a few turns and is supplied at several tens of kilovolts. The conical shape of the primary improves the coupling coefficient K. To increase K the high potential terminal 5 is made transparent to the main magnetic field B which changes with a frequency of tens of kilohertz. Electrode 5 is shown separately in Fig.12 and is seen to be a profiled insulator ring covered loosely by separate turns of thin wire which are electrically connected on top (line b in Fig.12). This electrode presents only a small resistance to changing magnetic flux. The ring 11 screening the edge of the primary winding is made in the same way. If the gas mixture being used is of sufficiently high quality the gap a can be 3-5 cm per megavolt. With proper geometry of the design being described, coupling coefficients K of 0.4 to 0.6 have been obtained. There is no ferromagnetic yoke. The secondary winding has several hundred single-layer turns. The natural frequencies of the primary and secondary circuits are both tens of kilohertz. If it is necessary to supply power inside the high potential terminal, e.g. for the injector filament power supply, or for the control system power supply there is a second layer of turns (shown in Fig.12 by

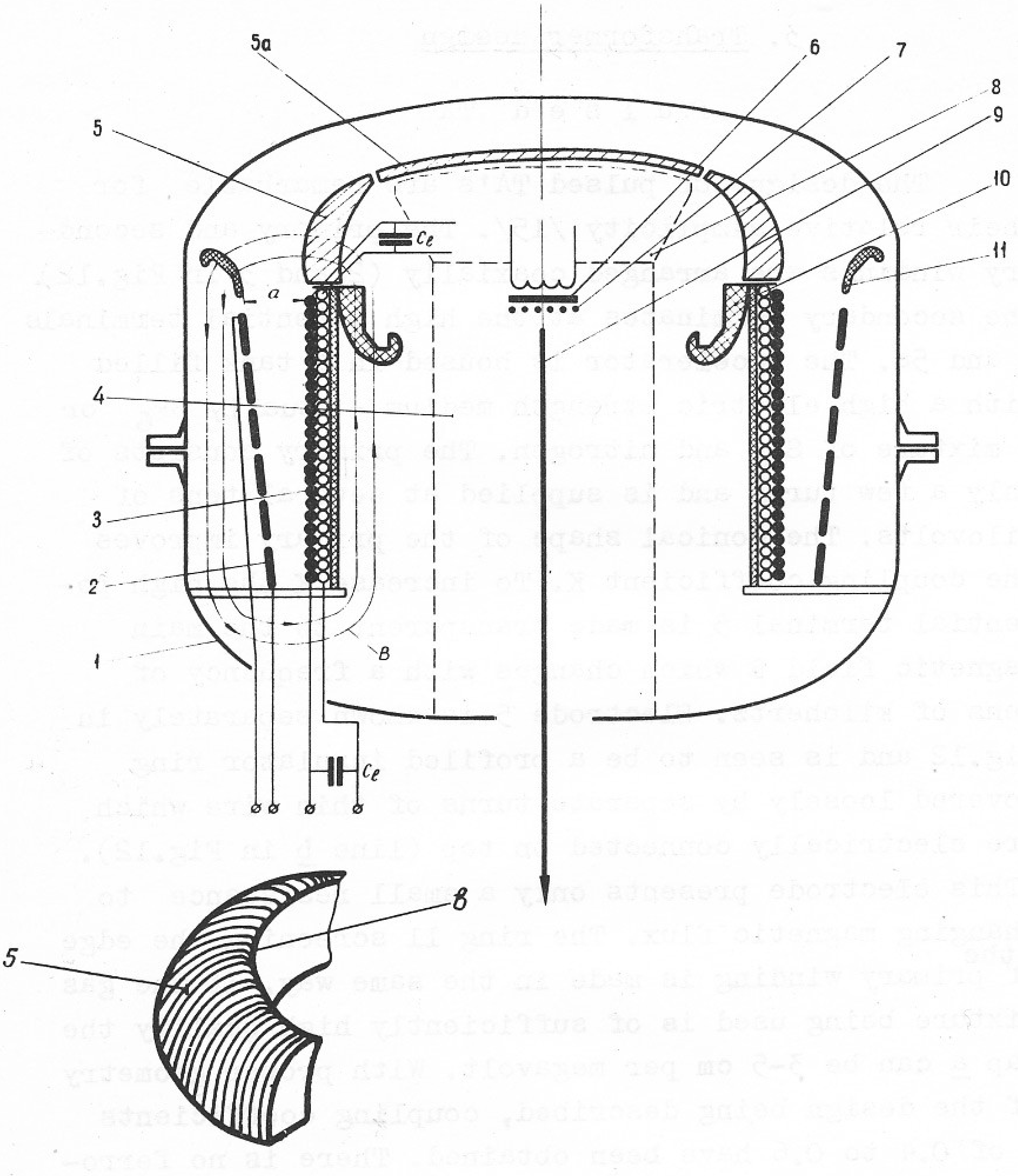

Fig.12. Pulsed transformer design.
1-tank, 2-primary winding, 3-secondary winding, 4-acceleration tube, 5,5a-high potential terminal, 6-cathode, 7-cathode grid, 8-injector control system, 9-electron beam, 10-protecting screen, 11-ring screening the primary winding edge.

little black circles). Both the layers have the same number of turns and are connected in parallel. A voltage supply (50 or 400 Hz, 0.3 - 2 kW) for the systems inside the high potential terminal is connected to the grounded ends of the layers. A low pulsed voltage arising between the layers in the course of the pulsed operation is short - circuited at the top and bottom ends of the layers by capacitors C_ℓ.

The operating interturn voltage produced between layers of the secondary winding is 1-3 kV, and the potential gradient along the winding is in the range of 3-5 MV/m. A wire with polyethylene insulation and outer diameter 1-3 mm is usually used; rating interturn electrical strength is in the range of 10-20 kV. As one can see in Fig.12 the design of the secondary winding is quite simple; a secondary of a 1-2 MeV TA may be wound by a man within 4 hours. The greatest hazard to the secondary winding is the interturn overvoltage arising under test or accidental direct breakdown to ground of the high potential terminal. After such a breakdown the secondary voltage distribution is determined by the distributed capacitance of the system. Fig.13a shows the transformer equivalent circuit and how the potential varies along the winding in this case. C_n is the longitudinal interturn capacitance, C_m is the transverse turns-to-ground capacitance. If the voltage U_2 is distributed along the winding approximately linearly before grounding (Fig.13, c, 1), the voltage along the winding at the moment when both terminals are grounded will qualitatively have the shape of curve 2. After breakdown there is an increase in potential gradient along the top part of the winding of $\sqrt{\frac{C_m}{C_n}}$ = 10-15 times the prebreakdown gradient. Until the entire secondary winding reaches zero potential there are damping oscillations causing increased turn-to-turn potential gradients in some parts of the winding. Experience shows however that these gradients do not exceed the overvoltages which take place just after breakdown at the top of the winding.

A marked improvement in the secondary winding electric strength is provided by screen 10 (Fig.12) which produces additional capacitance between the head end turns and terminal 5. An equivalent circuit for this case is shown in Fig.13b. The postbreakdown potential distribution is considerably improved (curve 3, Fig.13c) and the overvoltages are only 2-3 fold. The short time of breakdown and also a sufficiently high insulation strength margin in the winding provide a freedom from secondary winding damage with thousands of breakdowns. Since it is constructed by the method used for components 5 and 11 the screen 10 is also transparent to the main magnetic flux change. In operation the pulse repetition rate of a transformer may reach many hundreds per second. It is limited, first, by the heat release and transformer cooling provided, second, by the minimum allowed interval between pulses and, third, by the power supply capacity. In a number of models a repetition rate of 300 sec^{-1} is reached and in experimental models it is over 1000 sec^{-1}. Such machines have water-cooling of the tank and some of them have primary winding cooling in addition; a wire with radiation-improved polyethylene insulation is used for the secondary winding. The pulse-to-pulse interval must be larger than any leakage time for residual charges remaining in the transformer and tube after the operating cycle. This time interval seems to be no less than 10^{-3} - 10^{-4}sec. Within these limits the system may be considered as a pulsed one and design with high potential gradients is permissible. As for the power supply there are no limitations to its capacity in principle. But the standard hydrogen thyratrons used as commutators in a primary circuit are as a rule restricted to repetition rates of 300-500sec^{-1}. At a higher repetition rate it is necessary to increase the number of commutators thus complicating the system.

The pulse repetition rates are also connected with difficulties in maintaining the electrical strength of the acceleration tube under conditions of high average beam current. Difficulties such as heating of electrodes, appearance of residual charges and degradation of the vacuum appear. The design of the tube is considered in the next section. As seen in Fig.12 acceleration tube 4 is built inside the transformer. The power supply and control system 8 of injector 6 is placed inside the high voltage terminal 5.

In single pulse TA's the high potential terminal 5 is extended (Fig.26). The capacity formed by this electrode and the tank is charged by the transformer and the terminal is then connected to the tube with a cold cathode.

The best transformer electrical strengths have been obtained with machines filled with SF_6 at pressures of 15-20 atm. At the places of greatest stress in the gas the potential gradients amount to 400-500 kV/cm. Such machines usually have extra equipment to provide for reuse of the gas. For this purpose an extra tank is connected to the tank when it is necessary. This tank is cooled by liquid nitrogen. The gas condenses out in 1 to 2 hours and then the tank is sealed off hermetical-

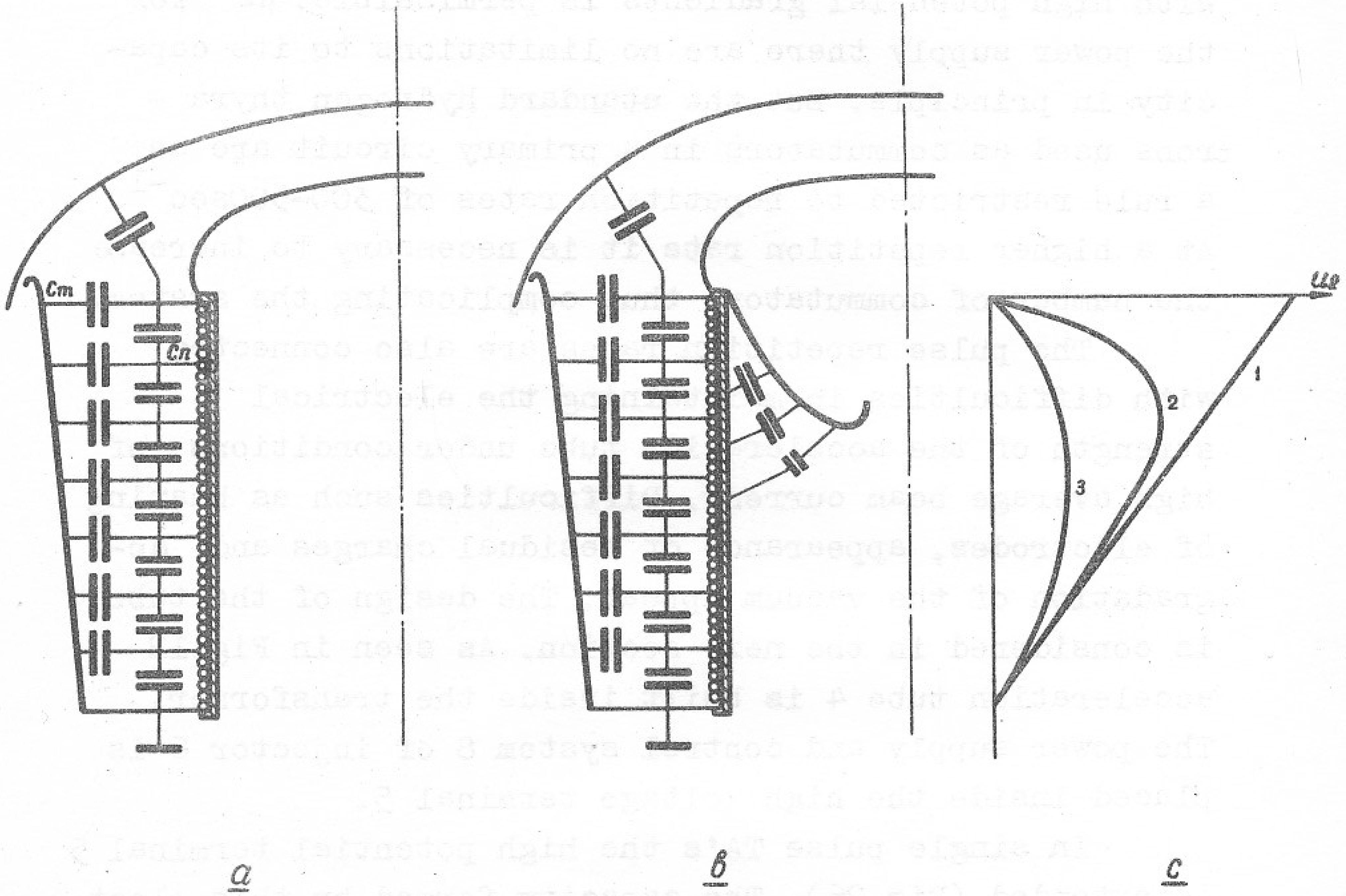

Fig.13. Equivalent circuit and voltage distribution at the instant of breakdown.

ly and the liquid SF_6 is stored there until the next filling of the TA. Big installations have special gas holders and compressors for gas pumping. When being used at less than maximum voltages the TA's are filled with a mixture of 5 to 20 % SF_6 in N_2. The tank of an industrial TA is opened only rarely (no more than once per year) and so gas conservation equipment is dispensed with.

In a single pulse TA (Fig.1c) interesting new opportunities are presented by filling the tanks with water purified by special techniques. The electrical strength of water when the pulse length is in the range 10^{-7}– 10^{-6} sec can reach 500 kV/cm /16, 17/. The energy density amounts then to 1 megajoule/m^3 and the wave impedance and power delivery time may be quite small. The main problems in designing a superpower TA filled with water are: 1) to increase the electric strength of the water subjected to pulses of longer duration, 2) to increase the water resistance thus reducing energy loss and 3)improving the efficiency. The investigations which are under way allow one to hope that progress in solution of all these problems will be rapid.

Industrial frequency transformers

The distinquishing feature of the low frequency transformer is the presence of a ferromagnetic yoke (Fig.14) /14, 18/. The yoke consists of several separate components:1) an outer magnetic circuit parts 12, 12a and 12b, 2) a high potential terminal 5 and 5a and 3) central column cores 13. The secondary winding sections 3 are electrically connected with cores 13. The potential of the central column pieces changes from the ground potential up to the full secondary voltage U_2. The core to core gas gaps (Fig.14a) are equal to 5 mm in the case of a typical model and are designed for an operating voltage of 70-80 kV; the gap a is under the full voltage U_2. The primary 2 is mounted within the outer magnetic circuit component 12. The acceleration tube 4 and the injector control system 8

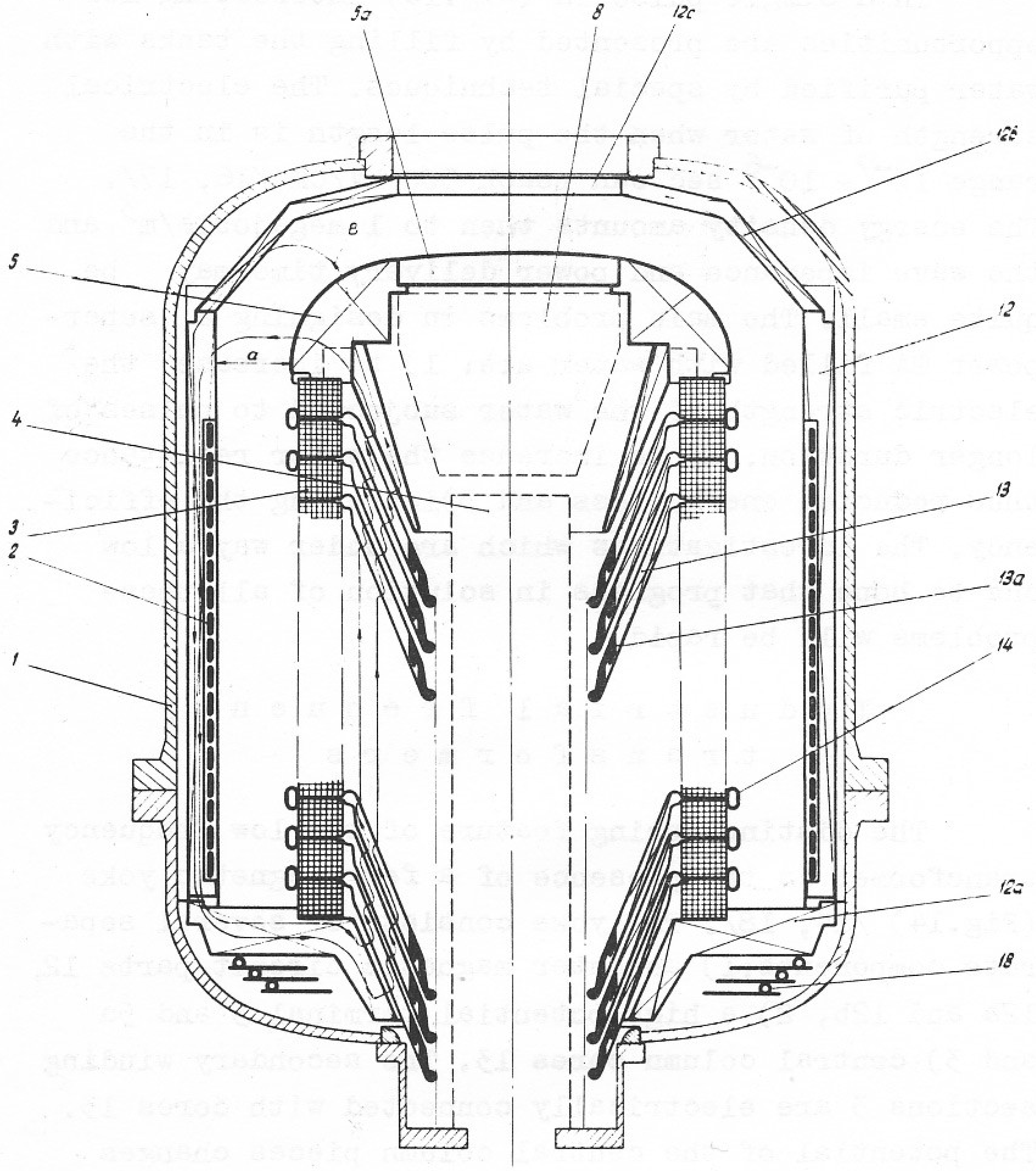

Fig.14. Design of industrial frequency transformer. 1-tank, 2-primary winding, 3-secondary winding, 4-acceleration tube, 5,5a-high potential terminal, 8-injector control system, 12,12a,12b,12c-components of outer magnetic circuit, 13-conical core, 13a-copper ring, 14-secondary winding coil screen, 18-cooling.

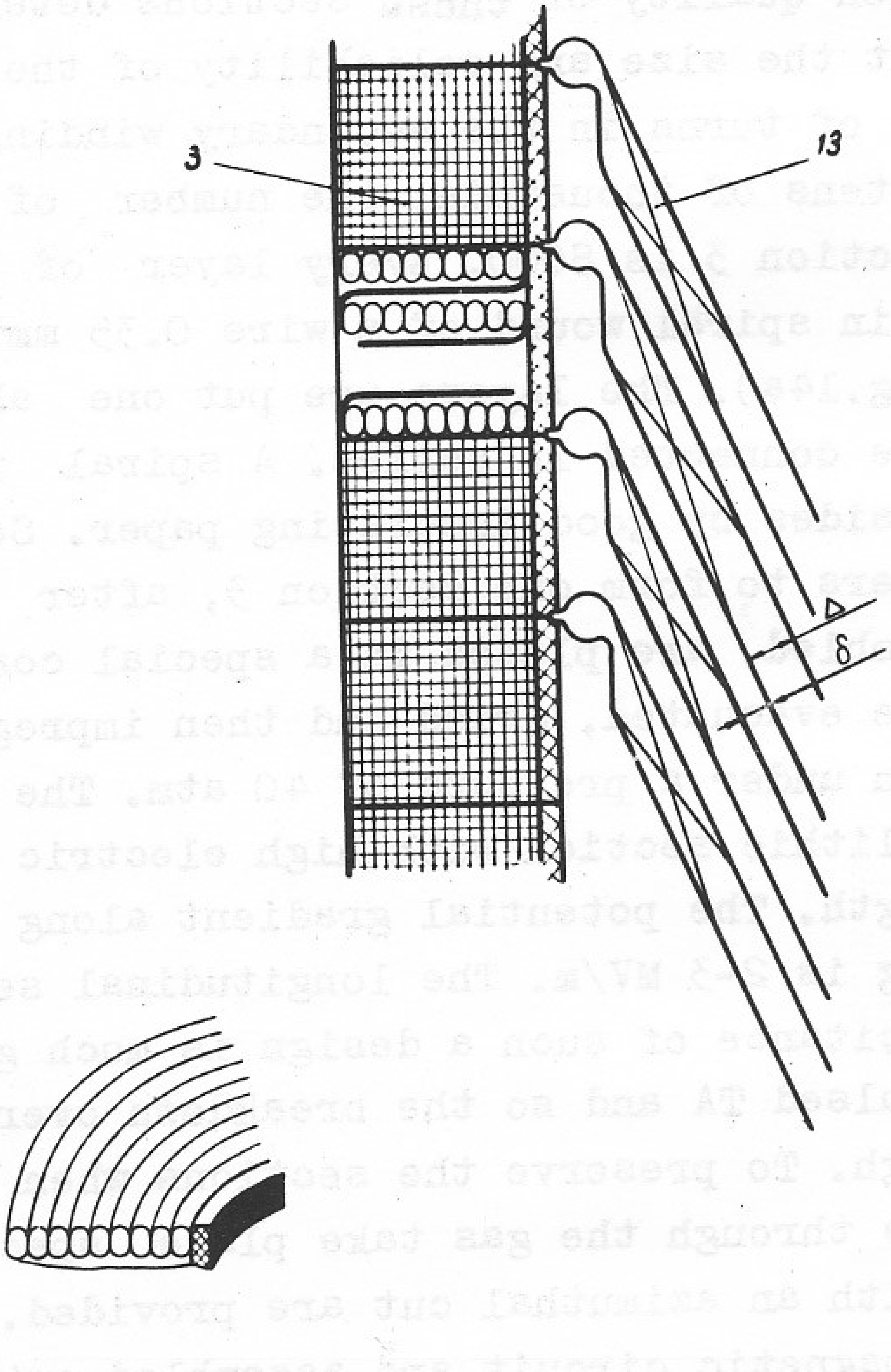

Fig.14a. Sections of transformer secondary winding.

are placed within the central column. All is contained inside a steel tank 1.

The sections of the secondary 3 are the most critical components of the transformer. Parameters and the production quality of these sections determine to a great extent the size and reliability of the TA. The total number of turns in the secondary winding amounts to many tens of thousands; the number of turns in each section 3 is 8000. Every layer of a section is a plain spiral wound of a wire 0.35 mm in diameter (see Fig.14a). The layers are put one above the other and are connected in series. A spiral is glued from both sides by good insulating paper. Several tens of layers to form one section 3, after having been assembled, are placed in a special container where they are evacuated, dried and then impregnated by epoxy resin under a pressure of 40 atm. The result is a monolithic section with high electric and mechanical strength. The potential gradient along the secondary winding is 2-3 MV/m. The longitudinal secondary winding capacitance of such a design is much greater than that of a pulsed TA and so the breakdown overvoltages are not high. To preserve the sections when accidental discharges through the gas take place special metallic rings with an azimuthal cut are provided. The components of a magnetic circuit are assembled out of radially oriented lamina of a conventional transformer steel of thickness 0.35 to 0.5 mm. The cores 13, like sections 3, are impregnated by epoxy resin after assembly and then are machined. Careful treatment of the surfaces of the cores permits the operating potential gradients in a gap to come up to 160 kV/cm and higher. The inner ring 13a is made of copper and is a base for assembly of core 13. It has no azimuthal cuts and so it screens the region where the acceleration tube is placed from magnetic fields. To provide a leakage for accidental charges the ring is electrically connected with the laminated iron core. The conical shape of the cores increases the longitudinal capacitance of the secondary winding and decreases the reluctance.

Dimensions of the transformer are chosen in such a way that its natural frequency is near 50 Hz. The coupling between the primary and secondary is high enough ($K=0.85\div0.9$) so that keeping on resonance does not play as important a role as it does in General Electric resonance transformers /3/ and in pulsed TA's (Fig.1). But here too operating under resonance conditions gives some advantages: the power factor increases, transformer loss decreases(because the reactive power due to the stray capacitance to ground of the central column circulates only in the secondary circuit), and, lastly, the requirements for a unit to adjust the input voltage to the primary circuit are relaxed.

A relatively high open circuit Q-factor of the transformer ($Q=60-70$) is reached by matching the ratio of core thickness to core-to-core gap $\frac{\Delta}{\delta}$ (Fig.14a). Indeed, if all the transformer parameters (operating frequency, materials of the magnetic circuit components and of the windings, all the structural dimensions of magnetic circuit, i.e. the full length, gap a and cross section along all the machine) are given, then, as a first approximation, the reactive power is $P_1=A_1\frac{i_L^2}{R}$, and the power losses in the copper and the steel are $P_2=A_2 i_L^2$ and $P_3=A_3\frac{i_L^2}{R^2}$ respectively. Here

A_1, A_2 and A_3 are coefficients which are constant under given conditions, i_L is secondary current and $R=\sum\frac{l_i}{\mu_i S_i}$ is the total reluctance of the magnetic circuit.

$Q=\frac{P_1}{P_2+P_3}=\frac{A_1 R}{A_2 R+A_3}$ is a function of the reluctance R. Using the condition $\frac{dQ}{dR}=0$ one finds the reluctance R^* corresponding to a maximum transformer Q-factor: $R^*=\sqrt{\frac{A_3}{A_2}}$, then the Δ and δ fulfilling the condition $\sum\frac{l_i}{\mu_i S_i}=R^*=\sqrt{\frac{A_3}{A_2}}$ are easily found.

The TA design provides for replacing of a control system 8, of an injector and of an acceleration tube without disassembling the tank. For tank filling the same gas mixtures and equipment for gas conservation are used as in the pulsed TA case. The potential gradient in the gap <u>a</u> is 200-300 kV/cm.

For acceleration-voltage adjustment there is an extra adjusting switch between the industrial mains and the TA which has a few taps from the primary winding. There is also a special quick-break safety switch which disconnects the TA from the mains in case of accidents /21/.

The design of a 3-phase TA is considered below in the section "Typical models".

4. Acceleration tubes

The TA's which have been described are capable of accelerating very intense beams. Electron beams have been accelerated up to 1 MeV and higher both in pulsed TA's (Fig.1a) and in single-phase TA's (Fig.8). Today the peak electron current in a pulsed TA with hot cathode is 100 A while a single pulse TA delivers current pulses of 30 kA. In single-phase TA's electron currents are as high as 130 mA and 1 MeV proton beams with currents up 80 ma also have been obtained in the same type machines. Average power in a number of models amounts to tens of kilowatts. The prospects are that high voltage TA's of considerably higher power can be designed, and thousands of kilowatts average beam power are technically realizable.

To accelerate such beams it is necessary to have tubes capable of operating with currents exceeding by several times those obtained so far. The acceleration tube is usually one of the weaker points in dc accelerators and the difficulties in understanding the nature of vacuum breakdown processes complicate designing new tubes if their characteristics, particularly the accelerated current, considerably exceed those of current experience. The main problems are, first, keeping high currents in a small radius beam so that small apertures may be used and the events causing full voltage breakdowns avoided and, second, suppressing the secondary particle current in the main channel.

The minimum main channel cross section in tube electrodes may be achieved by several means. One can increase the potential gradient and thereby increase the limiting current density of a beam. When the available vacuum potential gradients are greater than can be withstood on the tube insulator vacuum surface, electrodes should have the configuration shown in Fig.15a: electrodes are bunched along the tube axis and the tube diameter increased slightly. Such a design is usually used in pulsed TA's. The 1 MeV TA with pulse length of 10^{-6}- 10^{-5}sec has a channel length of its acceleration tube of 10-15 cm (the average potential gradient is 60-100 $\frac{kV}{cm}$). A channel diameter of 5-8 cm is enough for currents up to 100 A. The tube's electric strength in the presence of the accelerated beam does not deteriorate even at repetition rates up to many hundreds per second. Even higher currents may be accelerated in a channel of the same dimensions if the beam has been initially preaccelerated up to 200-300 kV and is then focused by an extra lens to smaller sizes (Fig.15b). The initial preacceleration is conveniently performed in a channel of large diameter.

For short duration pulses potential gradients may be considerably increased. The largest potential gradients (up to 1 MV/cm) have been achieved in tubes with field emission cathodes (Fig.15c) at a pulse length of 10^{-8}- 10^{-7}sec /19,20/.

Another way to increase the electric strength of a tube is to subdivide the beam into several beams which are simultaneously accelerated separately in channels of smaller cross sections (Fig.15d). It is known that a decrease of the channel aperture considerably improves the breakdown strength of a tube whereas an increase in the number of channels has a small effect. Besides, if the distance between the separated beams are larger than the electrode-to-electrode gaps then there is no space charge beam-beam interaction

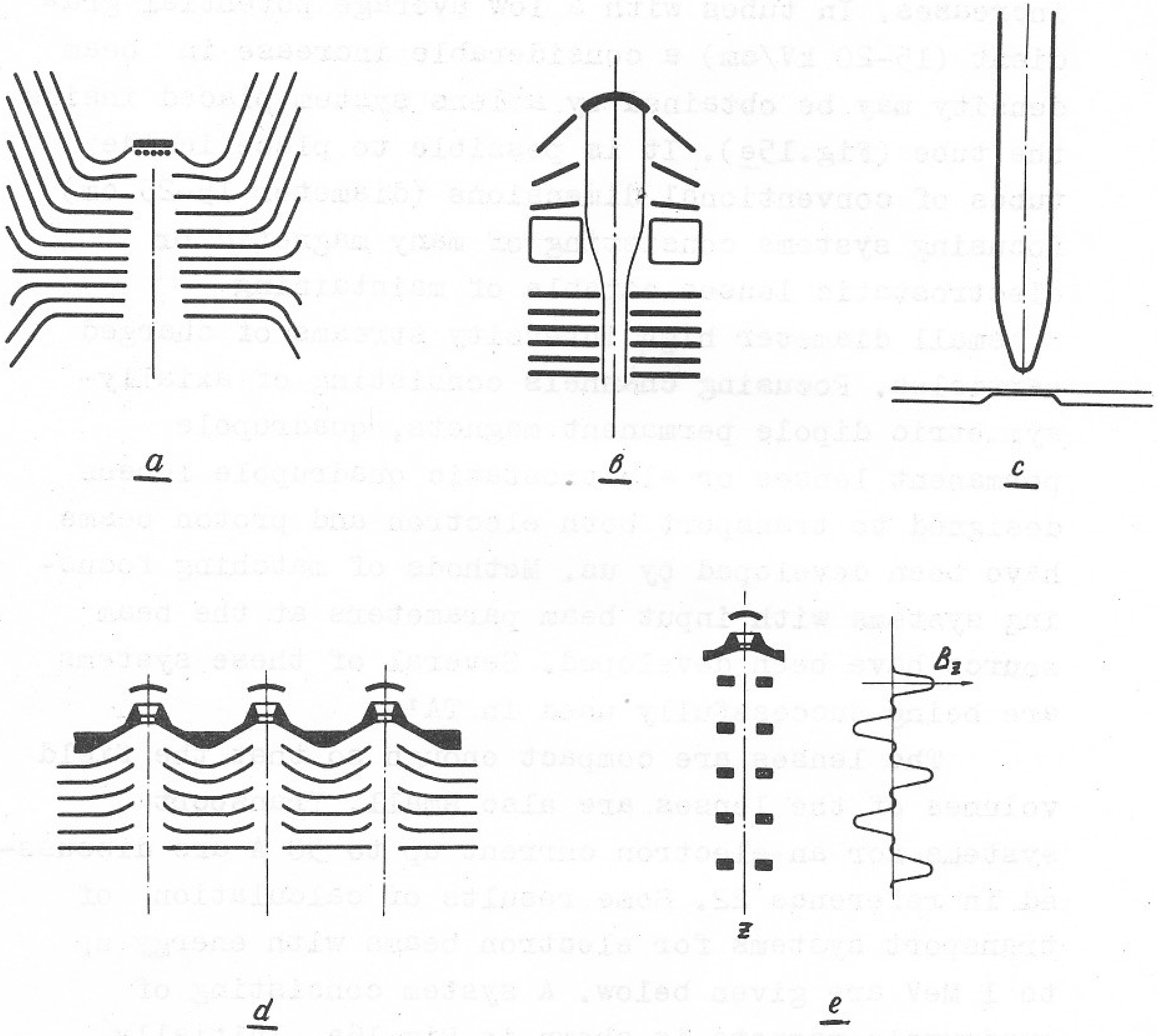

Fig.15. Types of acceleration tube electron-optic systems.

a - system with constricted electrodes;

b - beam focusing after preacceleration;

c - tube with field emission cathode;

d - particle acceleration in parallel channels;

e - beam focusing by permanent magnetic lenses.

so the limit of the particle density of each beam increases. In tubes with a low average potential gradient (15-20 kV/cm) a considerable increase in beam density may be obtained by a lens system placed inside the tube (Fig.15e). It is possible to place inside tubes of conventional dimensions (diameter 15-25 cm) focusing systems consisting of many magnetic or electrostatic lenses capable of maintaining small diameter high intensity streams of charged particles. Focusing channels consisting of axially-symmetric dipole permanent magnets, quadrupole permanent lenses or electrostatic quadrupole lenses designed to transport both electron and proton beams have been developed by us. Methods of matching focusing systems with input beam parameters at the beam source have been developed. Several of these systems are being successfully used in TA's.

The lenses are compact enough so that the field volumes of the lenses are also small. Transport systems for an electron current up to 50 A are discussed in reference 22. Some results of calculation of transport systems for electron beams with energy up to 1 MeV are given below. A system consisting of quadrupole magnets is shown in Fig.16a. Initially electrons are preaccelerated by a gun with spherical cathode and Pierce optics. The system has a FODO strong focusing structure, the inner diameter of each lens is 25 mm, the length is 26 mm and the single period length is 77 mm. The potential gradient distribution at the lens axis is taken to be bellshaped. A system of relative units is used so that the electron mass, charge and the velocity of light are each considered to be unity. In this case the tra-

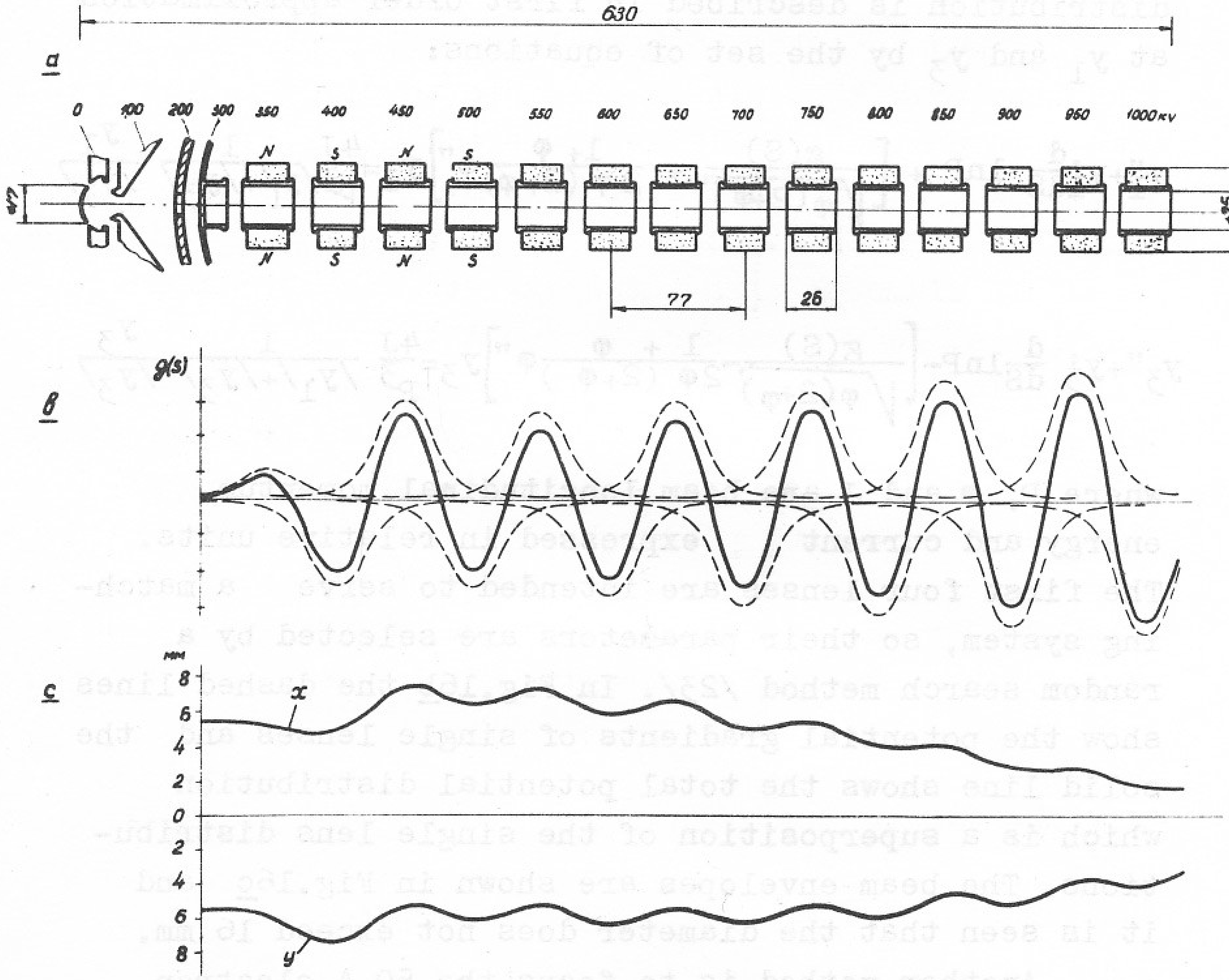

Fig.16. Electron acceleration in a chain of quadrupole magnetic lenses.

a - focusing channel

b - magnetic field gradient of lenses

c - beam envelopes

jectory of a boundary electron of a laminar stream of electrons (zero phase volume) at a uniform density distribution is described in first order approximation at y_1 and y_3 by the set of equations:

$$y_1'' + y_1' \frac{d}{dS} \ln P + \left[\frac{g(S)}{\sqrt{\varphi(2+\varphi)}} + \frac{1+\varphi}{2\varphi(2+\varphi)} \varphi'' \right] y_1 = \frac{4J}{P^3} \frac{1}{/y_1/+/y_3/} \frac{y_1}{/y_1/}$$

$$y_3'' + y_3' \frac{d}{dS} \ln P - \left[\frac{g(S)}{\sqrt{\varphi(2+\varphi)}} - \frac{1+\varphi}{2\varphi(2+\varphi)} \varphi'' \right] y_3 = \frac{4J}{P^3} \frac{1}{/y_1/+/y_3/} \frac{y_3}{/y_3/}$$

where P, φ and J are beam longitudinal momentum energy and current expressed in relative units. The first four lenses are intended to serve a matching system, so their parameters are selected by a random search method /23/. In Fig.16b the dashed lines show the potential gradients of single lenses and the solid line shows the total potential distribution which is a superposition of the single lens distributions. The beam envelopes are shown in Fig.16c and it is seen that the diameter does not exceed 16 mm.

Another method is to focus the 50 A electron beam by axially-symmetric magnetic lenses (Fig.17). Each of the first three lenses is two thin rings magnetized oppositely and placed in a common screen-housing. Other lenses in the chain are single type and are unshielded. The inner diameters of the first three lenses are 14 mm, those of the others are 17mm and the structure period length is 38.5 mm. The boundary particle motion in this case is described by

$$y'' + y' \frac{d}{ds} \ln P + \left[\frac{b^2(s)}{4\varphi(2+\varphi)} + \frac{1+\varphi}{2\varphi(2+\varphi)} \varphi'' \right] y = \frac{2J}{P^3} \frac{1}{/y/}$$

where b(s) is the longitudinal magnetic induction on the channel axis (Fig.17b). The maximum beam diameter here is about 12 mm (Fig.17c).

The focusing systems which have been described may be used in principle both for pulsed and for stationary beams. But at a large pulse length or at stationary operating conditions it is necessary to have essentially all of the particles passing through the system by providing that only a very small part (10^{-2}- 10^{-4}%) of the beam power reaches the electrodes. This requirement makes the tolerances on lens manufacturing and positioning considerably harder to meet and also demands a very good vacuum in the tube.

Estimates show that for the electron beams considered the effects of electron interaction with the metallic walls and the effects of potential redistribution do not degrade the performance.

A proton beam focused by permanent magnetic quodrupole lenses has been described previously /24/. Using the first ~~three~~ four lenses of the chain for matching the beam with phase density of 300 ma/cm.mrad, one can transport in the beam of 3 cm diameter a current of 100 ma. The potential variation along the tube is similar to that of Fig.16 and the magnetic field gradient in the lenses is about 900 gauss/cm.

For beams containing H_2^+ and H_3^+ ions in addition to protons, it is reasonable to use a system with electrical quadrupole lenses. Such a system is simple in manufacture and more transparent for vacuum pumping (Fig.18). Potentials on lens poles are supplied directly from the acceleration tube electrodes. As in the previous case the calculations are carried out taking phase volume into account. The high energy gain

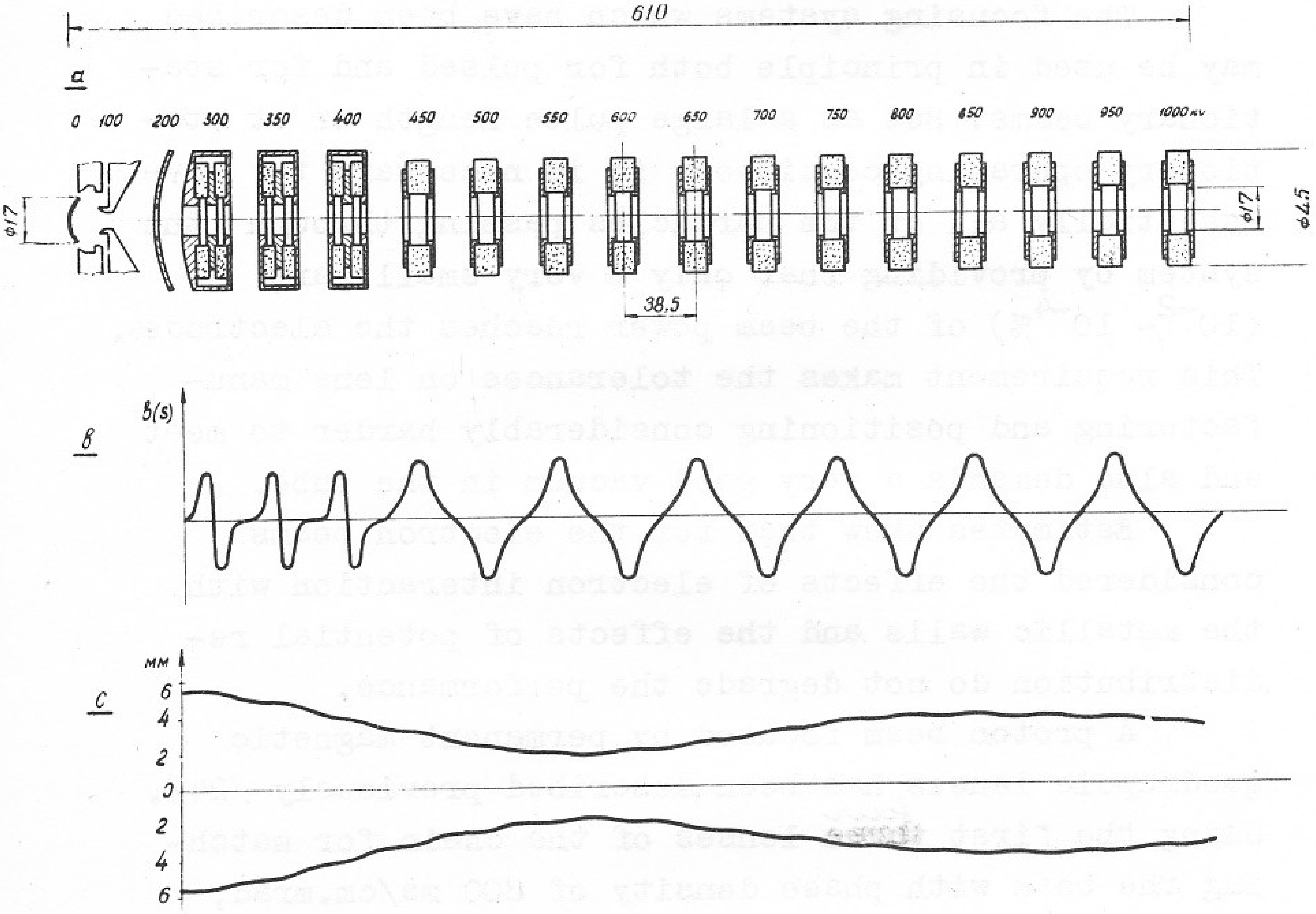

Fig.17. Electron acceleration through a chain of axially symmetric magnetic lenses.
a - focusing channel; b - magnetic induction on the channel axis; c - beam envelopes.

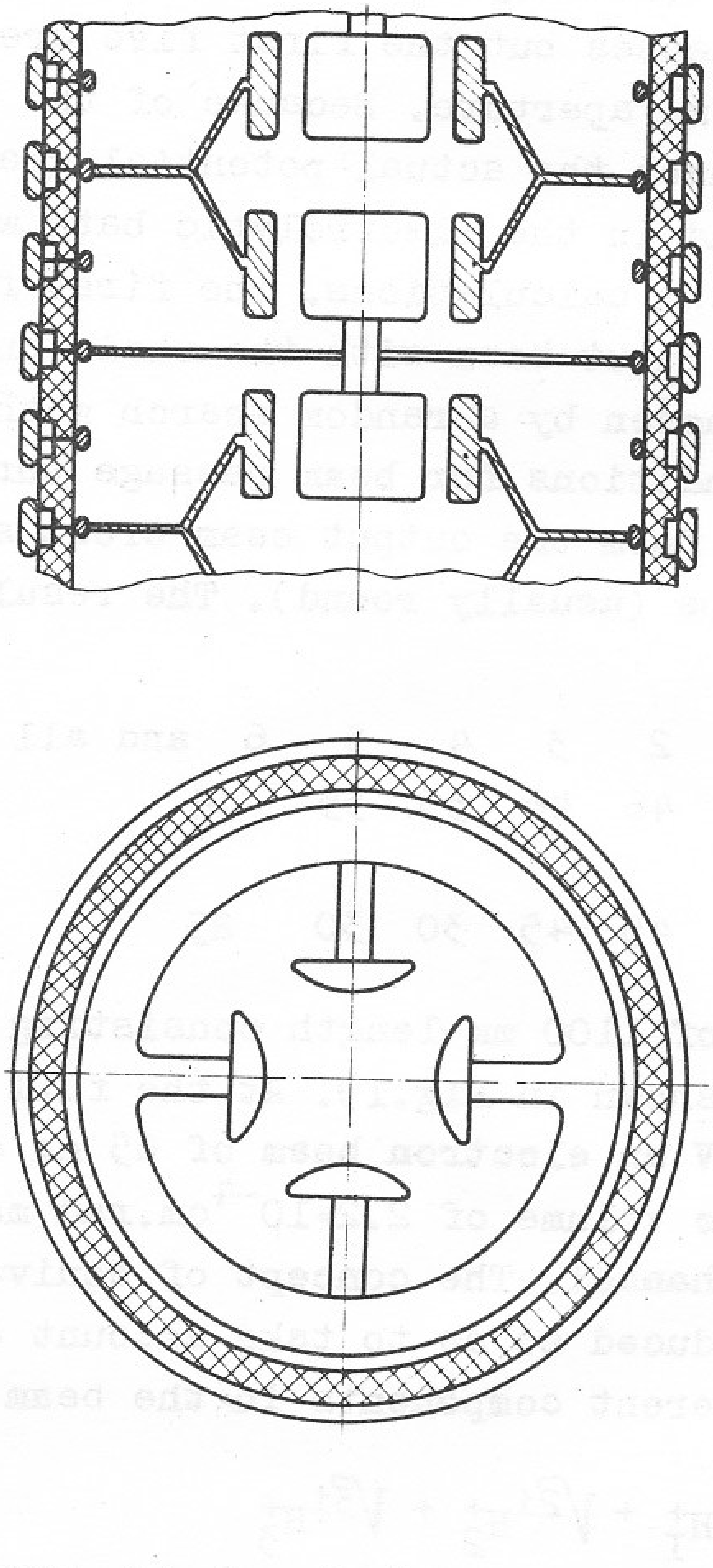

Fig.18. Focusing chain of electrostatic quadrupole lenses (scheme).

per period of the system requires resort to numerical calculation /25/. The focusing lenses alternate with defocusing lenses (FODO system). The period length is 154 mm. All the lenses but the first five are of 25 mm length and of 46 mm aperture. Because of the short length of the lenses the actual potential gradient distribution found in the electrolytic bath was taken into account in the calculations. The first five lenses are to match the input beam with the chain and their parameters are chosen by a random search method to provide the best conditions for beam passage through the tube and also to form the output beam cross section to a desired shape (usually round). The results for a proton TA are:

lens N	1	2	3	4	5	6 and all the others
aperture (mm)	55	46	46	55	55	46
length of the lens(mm)	25	45	45	30	30	25

A channel of 1100 mm length consisting of a chain of 14 lenses is shown in Fig.19. At the full channel voltage of 1.2 MV an electron beam of 65 ma equivalent current and phase volume of $2.2 \cdot 10^{-4}$ cm.rad may be passed through the channel. The concept of equivalent current is introduced so as to take account of the presence of different components in the beam /26/:

$$i_{eq} = i_{H_I^+} + \sqrt{2}\, i_{H_2^+} + \sqrt{3}\, i_{H_3^+}$$

The value $i_{eq} = 65$ ma was calculated for the beam obtained in an experimental proton accelerator (see section "Typical models") containing 50 % H_I^+, 30 % H_2^+ and

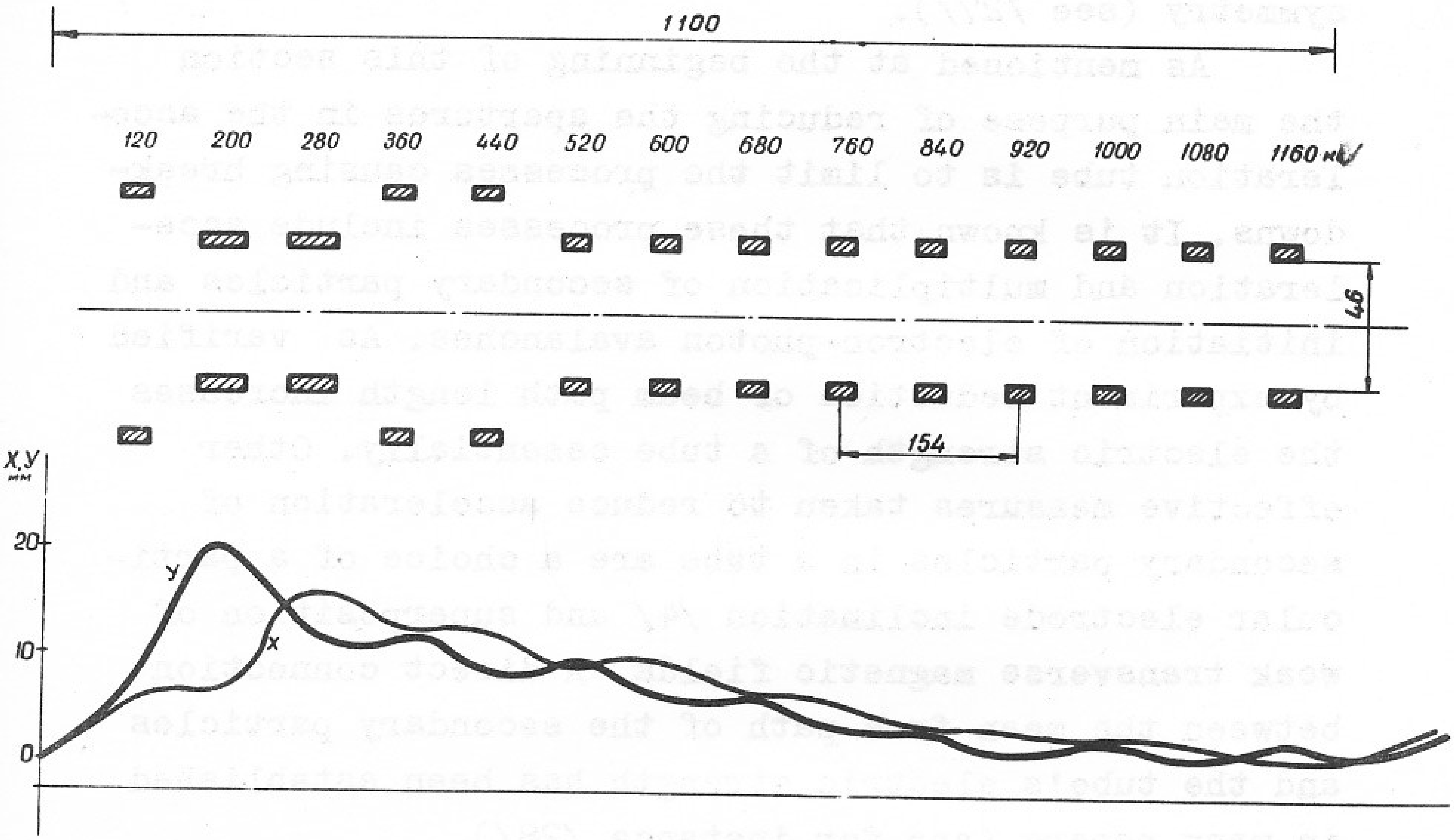

Fig.19. Acceleration of heavy particle beams through a chain of electrostatic quadrupole lenses.

20 % H_3^+. The beam envelopes are shown in Fig.19. The maximum potential gradient in the lenses does not exceed 7 kV/cm^2. The higher the tube voltage the higher the maximum current which can pass through the chain. Experimental testing of this channel will be discussed further later.

The capabilities of strong focusing systems employed in acceleration tubes are not exhausted by these examples. For one thing the gradients in the magnetic lenses can be considerably increased by using electromagnets. The transport capability of a tube can be increased also by using focusing systems with screw symmetry (see /27/).

As mentioned at the beginning of this section the main purpose of reducing the apertures in the acceleration tube is to limit the processes causing breakdowns. It is known that these processes include acceleration and multiplication of secondary particles and initiation of electron-photon avalanches. As verified by experiment reduction of beam path length increases the electric strength of a tube essentially. Other effective measures taken to reduce acceleration of secondary particles in a tube are a choice of a particular electrode inclination /4/ and superposition of weak transverse magnetic fields. A direct connection between the mean free path of the secondary particles and the tube's electric strength has been established in many papers (see for instance /28/).

In connection with investigations of strong focusing systems for acceleration tubes the ability of the systems to remove accidental particles from the channel has been analysed /29/. By means of a random number generator the appearance in a tube of 100-900eV electrons with randomly directed velocities was simulated. The trajectory of each electron was calculated up to the moment of impingement on electrodes or of leaving the tube. The secondary-electron characteristics of three types of focusing systems equivalent in focusing the main beam (magnetic quodrupoles, electrostatic quodrupoles and axially-symmetric magnetic lenses) have been studied. The smallest mean free path of secondary particles and hence the highest electric strength is provided by systems employing magnetic quadrupole lenses. It is possible to design channels with quadrupole lenses in which the path of the majority of the secondary particles is less than the structure period length.

The sectionalized insulator is the most complicated component of a tube to manufacture. At a small aperture in the acceleration channel high potential gradients can be maintained at the tube axis, so that the tube length is determined by the electric strength of the insulator - to be more exact, by the electric strength of the insulator vacuum surface. The latter is critical since the strength of an insulator surface in vacuum is considerably less than that of one covered with high pressure gas. Use of a sectionalized surface provides for electric strengths on the gas side of 150 kV/cm and higher. In addition, the vacuum surface is strongly affected by accelerated particles. In a TA with pressurized SF_6 and with a carefully made secondary winding the axial dimensions are determined primarily by the acceleration tube insulator.

In the case of industrial accelerators, ease of maintenance is one of the essential factors, so it is desirable to use sealed-off tubes with metal-ceramic or metal-glass insulators without organic materials. Complication in manufacture in this case is justified by economy in operation. On the other hand, in experimental conditions the tube must be easily disassembled and continuous pumping is permissible.

A few designs of sectionalized insulators have been worked out for TA's intended for various purposes. Typical insulators are shown in Fig.20. In case a, the tube insulator is a metal-ceramic tube, ceramic rings 1 are connected with copper electrodes 2 by thermodiffusion welding /9/. After electrodes 2 have been welded to the ceramics the separate sections are connected with each other by electrowelding of electrodes 2 in a helium atmosphere. Such a tube may be baked and sealed off.

In case *b*, the insulator is an all-ceramic tube 1, on which the voltage distribution is provided by rings 2 and 3 closely fitted to the tube from both inside and outside. Rings 2 and 3 of each pair are maintained at the same potential by a few vacuum tight conductors 4. The value of the average potential gradient along a tube in this case is determined mainly by the joint properties of the metal rings and insulators. It is known that in a small clearance between metal and insulator, the electric field strength may turn out to be higher by a factor of ε. In case *b* inexpensive tubes of porcelain are used for insulator manufacture. Potential gradients in cases *a* and *b* to date are as high as 2.5MV/m both for pulse lengths of 10^{-5}sec and for 50 Hz operation.

Higher gradients have been obtained at insulators of types *c* and *d*. These constructions are usually made of plexiglass or epoxy compounds and are used in continuously pumped systems. The vacuum seals for rings 1 and electrode 2 are provided by rubber gaskets 5. The compression of the tube when assembled is provided by atmospheric pressure plus an added gas pressure. In case *d* the insulator is tightened in a jig and then rings 6 are put on as locks. The longitudinal operating gradient increases when the insulator is sectionalized more finely and is in case *c* in the range 2.5-3 MV/m and in case *d* in the range 3.5-4 MV/m (for the pulse length $10^{-5}\mu$sec). For short voltage pulse lengths (about 10^{-7}sec) in case *c*, potential gradients of 8 MV/m and higher are permissible.

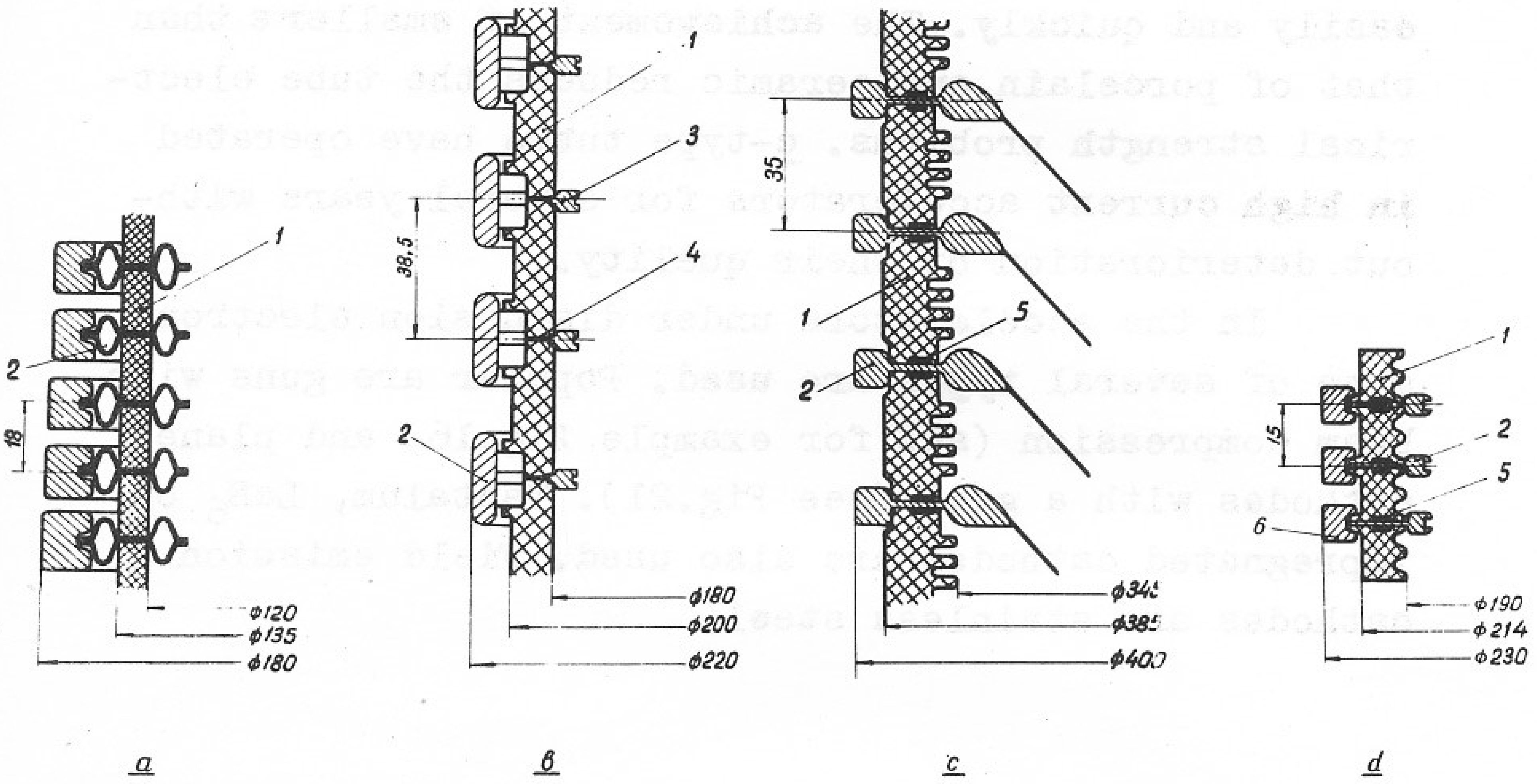

Fig.20. Designsof sectionalized insulators of acceleration tubes.

a - metal -ceramic tube;
b - voltage spacing on all-ceramic tube;
c and d - insulating rings, rubber sealed;
1 - insulating rings;
2 - metal rings which space the voltage
3 - metal rings which determine potential on the insulator vacuum surface;
4 - electrical connection of outer and inner rings;
5 - gasket;
6 - locking rings.

Manufacturing of such tubes is not complicated so a variety of sizes and configurations may be produced easily and quickly. The achievement of smaller ε than that of porcelain and ceramic reduces the tube electrical strength problems. c-type tubes have operated in high current accelerators for several years without deterioration of their quality.

In the accelerators under discussion electron guns of several types are used. Popular are guns with beam compression (see for example Fig.16) and plane cathodes with a grid (see Fig.21). Tantalum, LaB_6 or impregnated cathodes are also used. Field emission cathodes are stainless steel.

5. Typical models

The single-phase TA was proposed in 1963 and the pulsed TA with a hot cathode in 1965. In the interim ten or so different modifications have been constructed and tested. The development of the single pulse TA and 3-phase TA's is more recent and the first experimental models are currently undergoing tests.

Brief descriptions of late models of typical accelerators are given below.

Pulsed TA

ELITA - 1.5 (electron impulse transformer accelerator of 1.5 MeV).

Guaranteed specifications of this model are electron current 100A at energy 1.5 MeV. Pulse length can be varied from 50 nsec up to 3 μsec at pulse repetition rates from single pulses up to 100 Hz.

The accelerator is shown in Fig.21. The 1 m diameter by 0.8 m long tank housing the accelerator is filled with SF_6 at a pressure of 12-14 atm. The primary winding 2 has 4 turns and is supplied at 20-30 kV. High voltage winding 3 contains 350 turns. The coupling coefficient is K=0.6, natural frequencies of the primary and secondary circuits are about 80 kHz. The capacitance to ground of the high potential terminal and high voltage turns 3 is about 150 pF and stores about 170 J at 1.5 MV. At a pulse length of 50 nsec and current amplitude of 100 A the voltage excursion and consequently the spread in accelerated electron energy, amounts to about 2 %. If the pulse length becomes wider, the energy spread increases, but the uniformity does not deteriorate seriously because

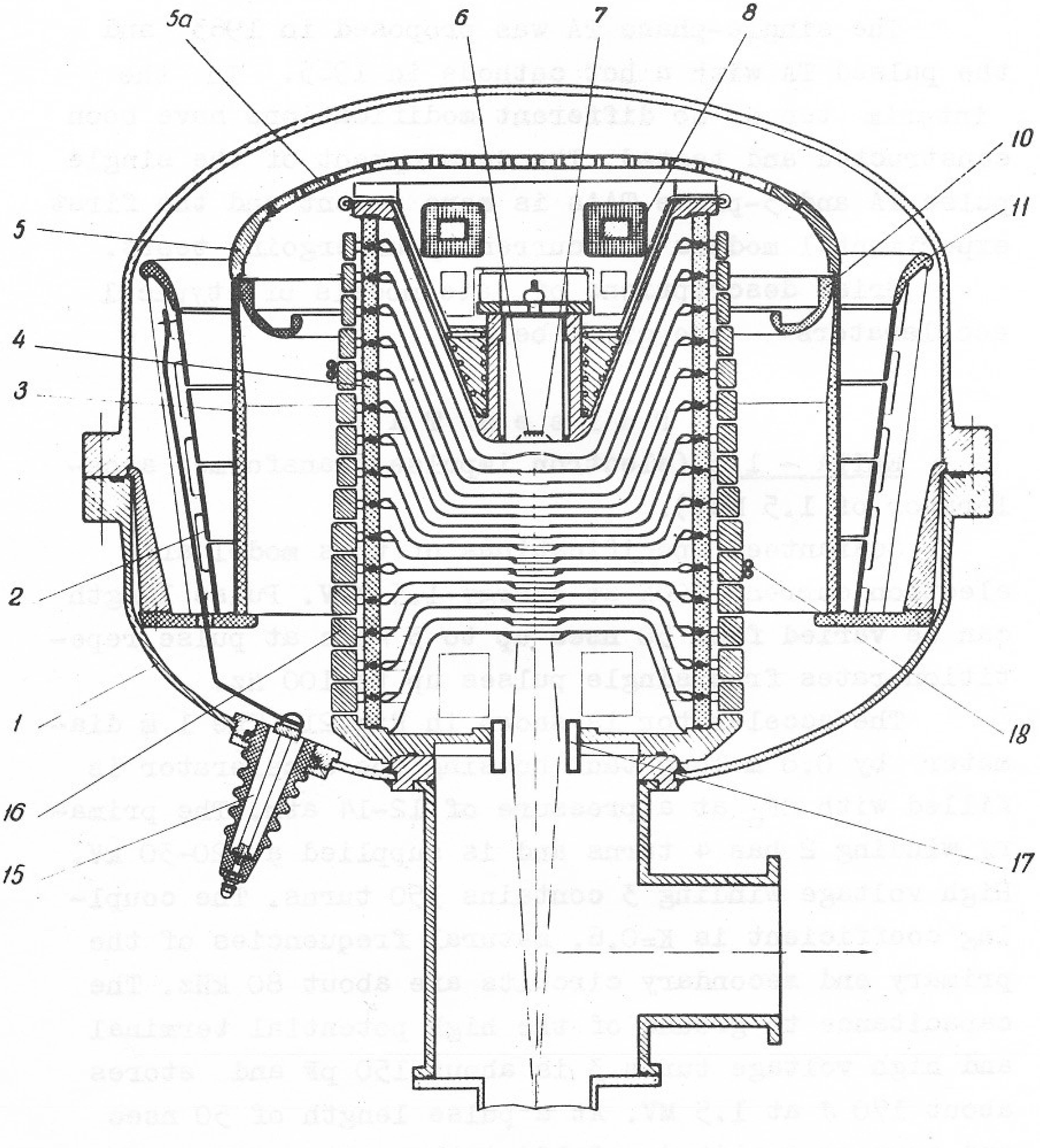

Fig.21. Design of ELITA-1.5. Legend for parts on p.53.

Parts denoted on Figs.12, 14, 14a, 21, 23, 24, 26, 29 and 30.

1 - tank
2 - primary winding
3 - secondary winding
4 - acceleration tube
5,5a - high potential terminal
6 - cathode
7 - cathode grid
8 - injector control system
9 - electron beam
10 - protecting screen
11 - ring which screens the edge of primary
12,12a,12b,12c - components of outer magnetic circuit
13 - conical core
14 - screen of the secondary
15 - input of primary
16 - rings which equalize electrode-to-electrode capacitances
17 - focusing lens
18 - cooling
19 - bell
20 - triggering gap
21 - cooling fan
22 - vacuum pump
B - magnetic field

energy is provided to the transformer secondary 3 during the beam pulse period. The initiation time, pulse length and current amplitude may be chosen so that the energy during a pulse is quite uniform. Thus at a pulse length of 2 μsec and at a current of 80 A the energy spread is 7 % (Fig.22). If a more powerful injector is used operation at U_2=const=1.5 MV is possible (see Fig.7). At a pulse length of 2.7 μsec current must fall from 175 A to zero and beam energy output is 360 J per pulse. At these operating conditions (Fig.7 and Fig.22) the primary is supplied at a higher voltage to provide the loss associated with secondary loading. The dashed line in Fig.7 shows what the voltage would be without the beam pulse.

The acceleration tube 4 is assembled by epoxy rings tightened to the electrodes by rubber gaskets, and the electrodes are compressed along the tube axis. A LaB_6 cathode with 30 mm diameter grid is used as injector. The acceleration channel length is 23 cm, the diameter 7 cm. Power for cathode heating and for the injector control system 8 (about 1 kW) is supplied through the secondary winding 3 which consists of two layers as shown in Fig.12. Rings 16 are mounted between the electrodes to equalize capacitances; the ring-to-ring clearances produce additional capacitances so that the pulsed voltage is distributed uniformly along the tube. For accidental leakage an ohmic voltage divider which is not shown in Fig.21 is connected along rings 16. The time constant of the divider is $1.5 \cdot 10^{-3}$sec so that leakage takes place between cycles.

After leaving the tube the beam 9 is focused by magnetic lens 17 and then strikes the object which is to be irradiated. Tube pumping is performed by a 500-liter oil-diffusion pump with a liquid nitrogen trap. Cooling of components near the injector at high potential is provided by oil circulating through insulating pipes 18. The apparatus may be operated either in a vertical or in a horizontal position. The weight of the accelerator itself (without radiation shielding, power supply and control systems) is about 500 kg.

A valuable component of the accelerator power supply is a primary circuit commutator providing energy recuperation (Fig.4). Six pulsed hydrogen thyratrons ТГИ 1-2000/35 antiparalleled are used as a commutator. Each thyratron carries current over its rating (about 3.5 kA against rating 2 kA) but is operated at a considerably lower voltage than the rated value (about 18 kV against rating 35 kV). These operating conditions in combination with carefully chosen grid circuit parameters for the hydrogen thyratron enable one to ensure interruption of the primary current at the exact moment t_{11} (see Fig.4). Electron energy, pulse repetition rate, injection current and other beam parameters are controlled from a control board. Injector control determines the accelerated pulse length and shape. The control system units are replaced or switched when converting the machine to new operating conditions. The primary circuit power supply may limit the average power of the electron beam which reaches 10 kW for this apparatus. Several papers, particularly references /11/ and /12/ are devoted to commutating devices and other components of pulsed accelerator power supplies.

The <u>ELITA-3</u> machine is rated at 2.5-3 MeV electron energy and 20 or 40 A current. The common operating regime produces wide pulses up to 10 μsec long. Pulse repetition rate is 100 or 300 Hz. Maximum available beam output energy per pulse is about 1000 J, and maximum current is 40 A. Average beam output power is 20 kW and higher. The tank diameter is 1 m and its height 1.3 m. The tank is filled with SF_6 at 20 atm. The insulating rings of the acceleration tube are an epoxy-compound. The design of the vacuum envelope is shown in Fig.20d.

Operation in either vertical or horizontal position is envisaged. The apparatus is transportable. The power supply and other parts of the system are similar to those of ELITA-1.5.

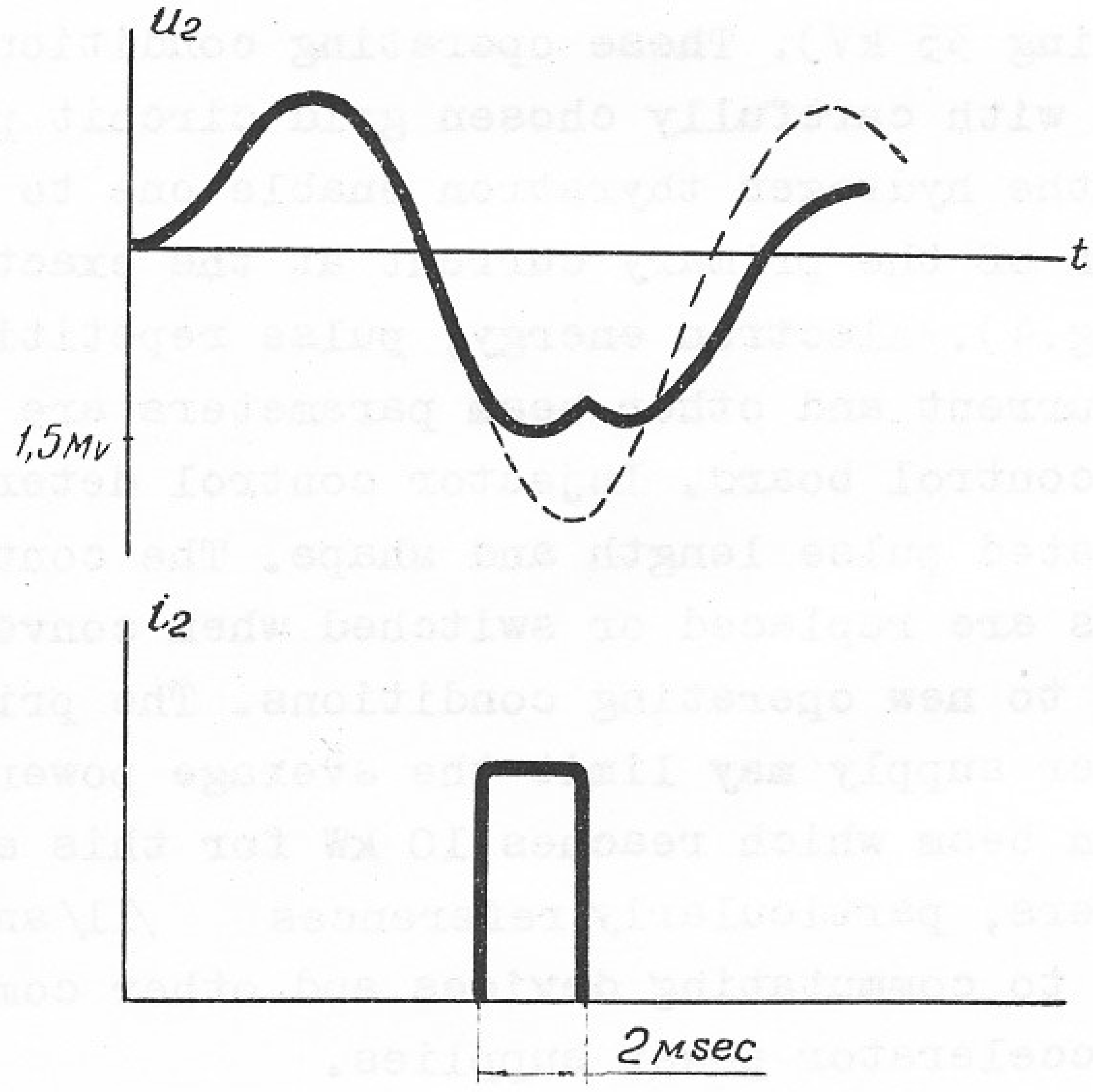

Fig.22. Tube voltage and current vs. time.

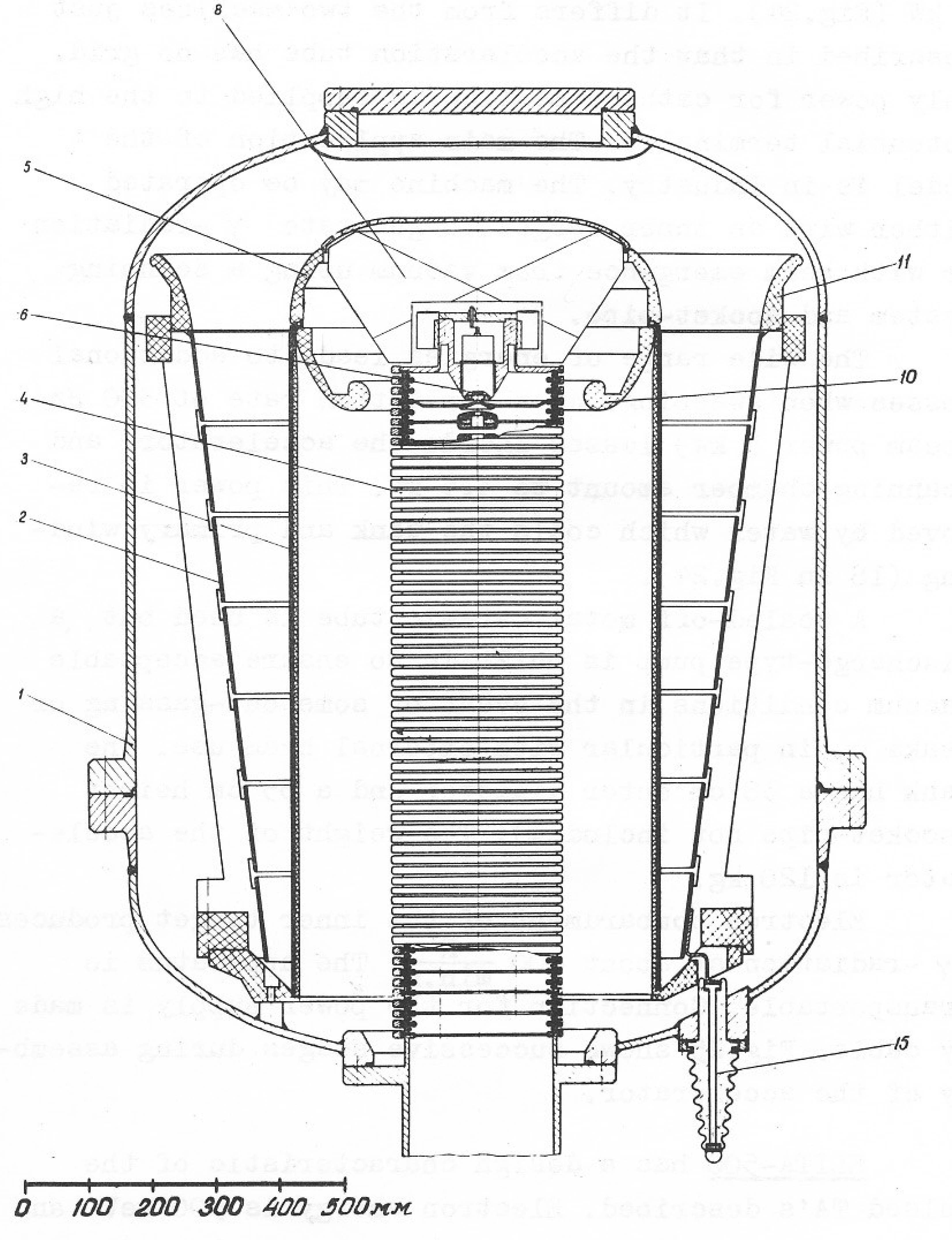

Fig.23. Design of ELITA-3. Legend for parts on p.53.

ELITA-1 is a portable electron accelerator for energies up to 1 MeV and average beam power output of 8 kW (Fig.24). It differs from the two machines just described in that the acceleration tube has no grid. Only power for cathode heating is supplied to the high potential terminal 5. The main application of the model is in industry. The machine may be operated either with an inner target to generate γ -radiation or with beam emergence from vacuum using a scanning system and socket-pipe.

The wide range of energies leads to additional losses when sweeping. At a repetition rate of 300 Hz (beam power 8 kW) losses inside the accelerator and scanning chamber amount to 3.5 kW. This power is removed by water which cools the tank and primary winding (18 in Fig.24).

A sealed-off metal-ceramic tube is used but a discharge-type pump is built in to ensure acceptable vacuum conditions in the event of some out-gassing or leaks , in particular with external beam use. The tank has a 38 cm outer diameter and a 55 cm height (socket-pipe not included). The weight of the accelerator is 120 kg.

Electron bombardment of the inner target produces γ -radiation at about 400 $\frac{R}{min.m}$. The apparatus is transportable. Connection for the power supply is made by cable. Fig.25 shows successive stages during assembly of the accelerator.

ELITA-500 has a design characteristic of the pulsed TA's described. Electron energy is 500 keV and average power is 1 kW. The tube is the sealed-off type and a tungsten target is permanently installed inside

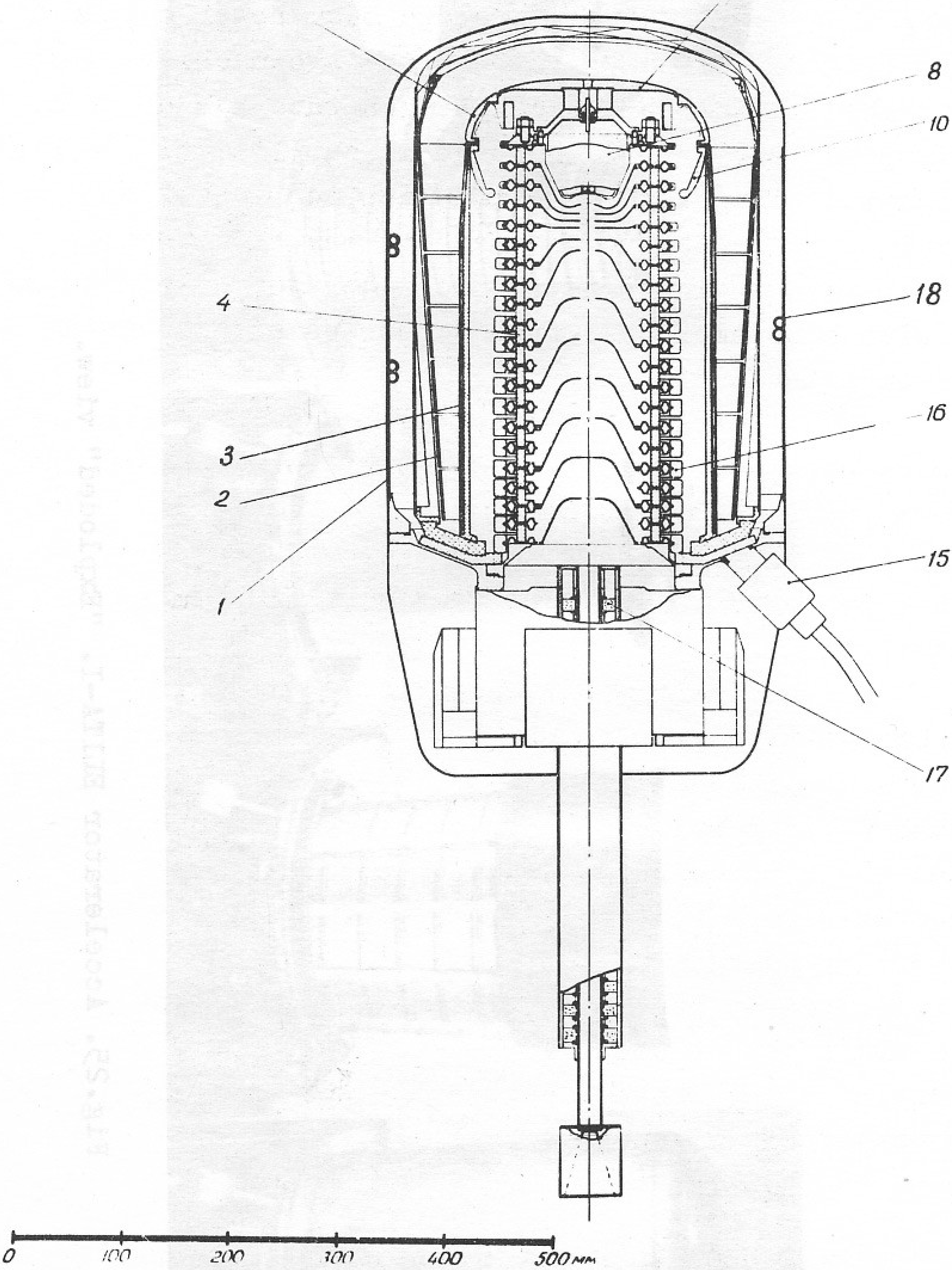

Fig.24. Design of ELITA-1. Legend for parts on p.53.

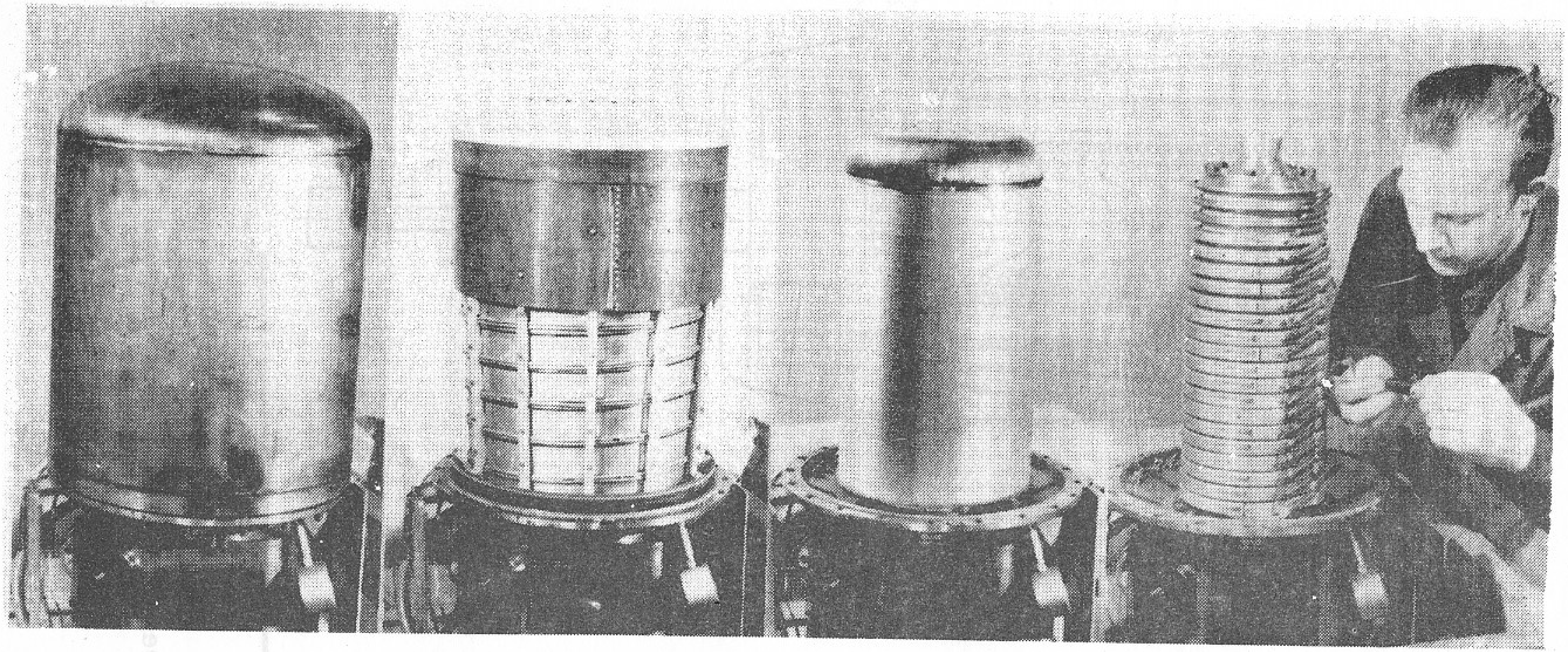

Fig.25. Accelerator ELITA-I. "Exploded" view.

the machine. The tank has a 28 cm outer diameter and a 50 cm height and weighs 40 kg. The power supply is in a separate unit for ease of transportation. This accelerator is intended to operate as a portable X-ray apparatus.

RIUS-5 is an accelerator generating single pulses of electron current up to 30 kA at 5 MeV/12/. The pulse length is about 40 nsec. The design of the high voltage generator (Fig.26) is typical of pulsed TA's (Fig.12). The tank has a 2 m diameter and 5.5 m length (acceleration tube included). High voltage is supplied to acceleration tube 4 after triggering gap 20. Natural frequencies of the primary and secondary windings are 32 kHz, the coupling coefficient is K=0.45 and capacitance to ground of the high potential terminal 5 is 220 pF. Total capacitance of the secondary circuit including capacitance of the secondary winding is 280 pF. The number of primary turns is 4 and the secondary has 580 turns. The primary voltage being 50 kV the secondary voltage is U_{2max}= 7 MV. Such a voltage is actually obtained by filling the tank with a gas mixture of half SF_6 and half N_2. When the high voltage gap is triggered, up to 40 % of the energy stored in C_2 (about 2.5 kJ) is converted into electron beam energy. It is proposed to use other means of high voltage gap triggering in order to reduce spark resistance and to convert a larger part of the available energy into beam output. Fig.27 is a photo of the 15 kA electron beam ejected into air. The beam diameter is about 3 cm and the beam is luminous for about 1.3 m (the photo was taken at an acute angle). So far the accelerator

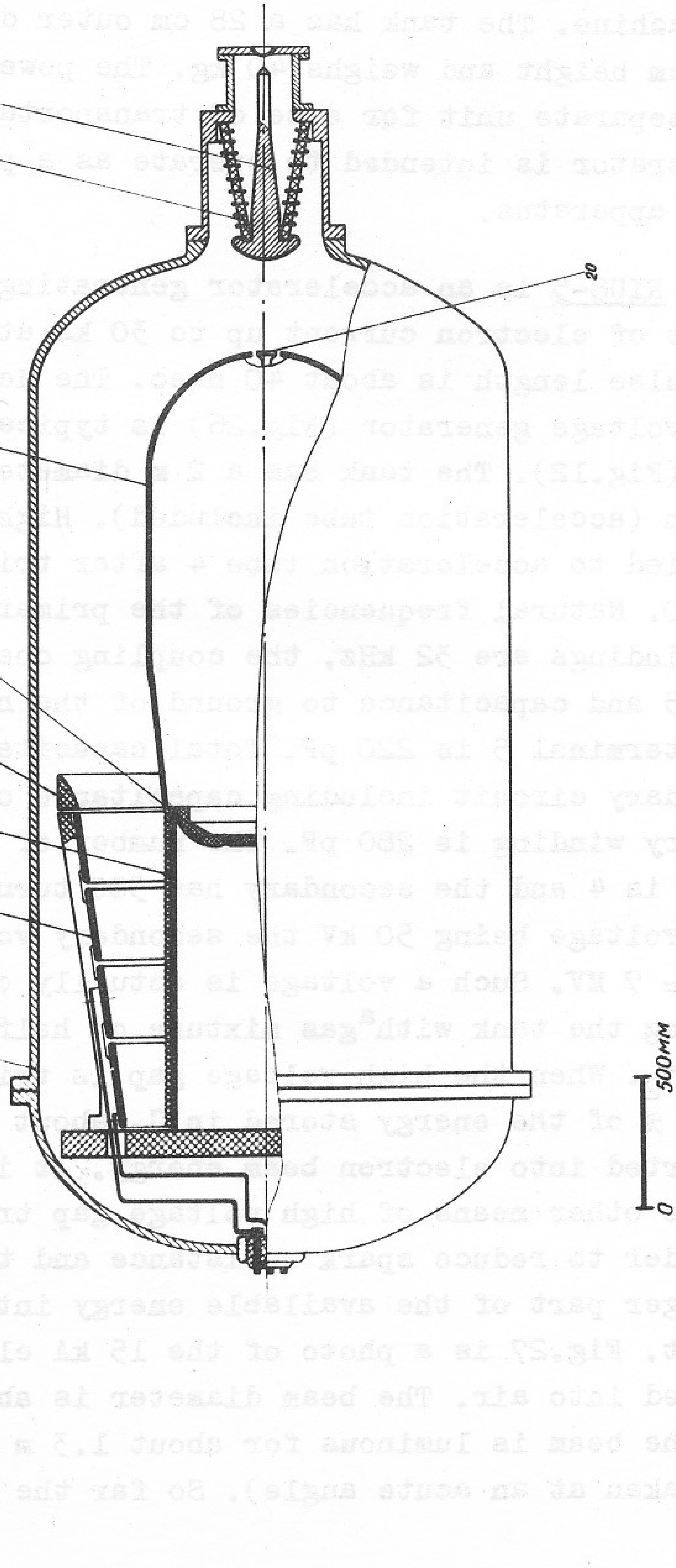

Fig.26. Design of RIUS-5. Legend for parts on p.53.

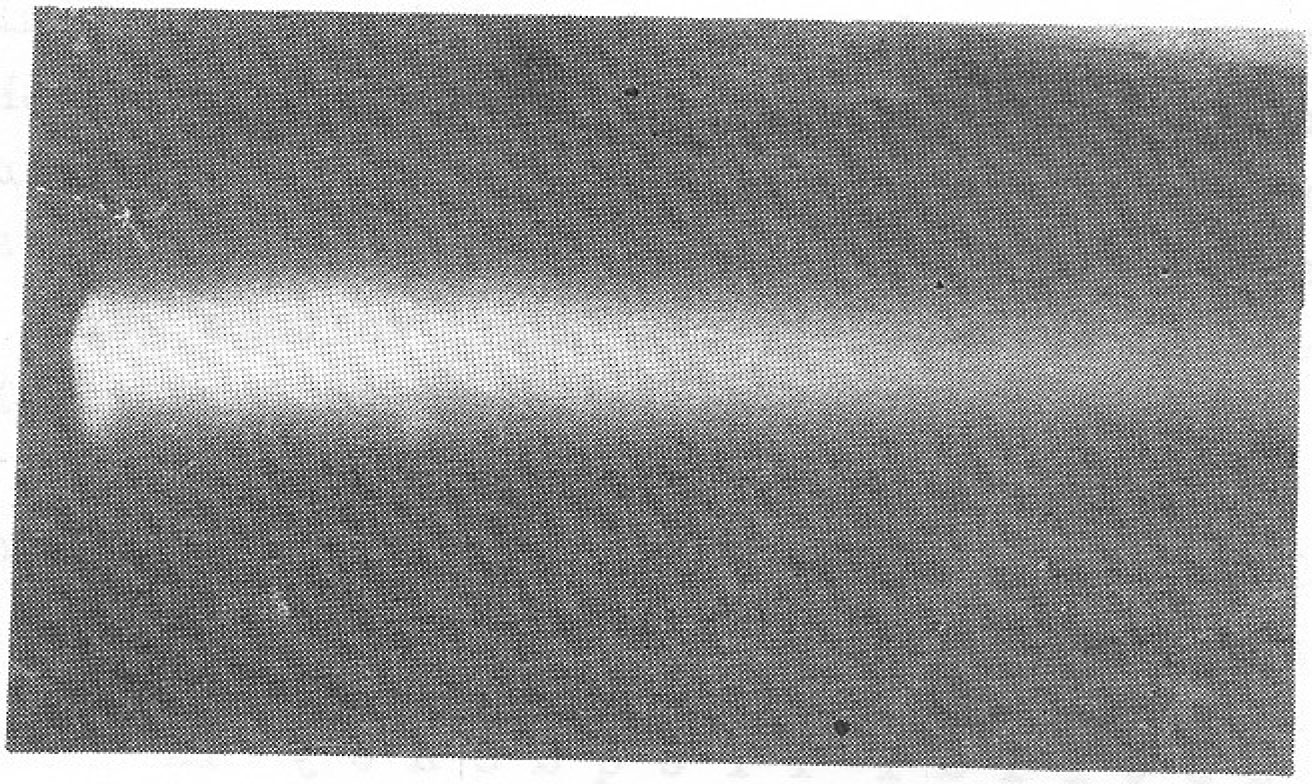

Fig.27. Beam of electrons extracted into air.

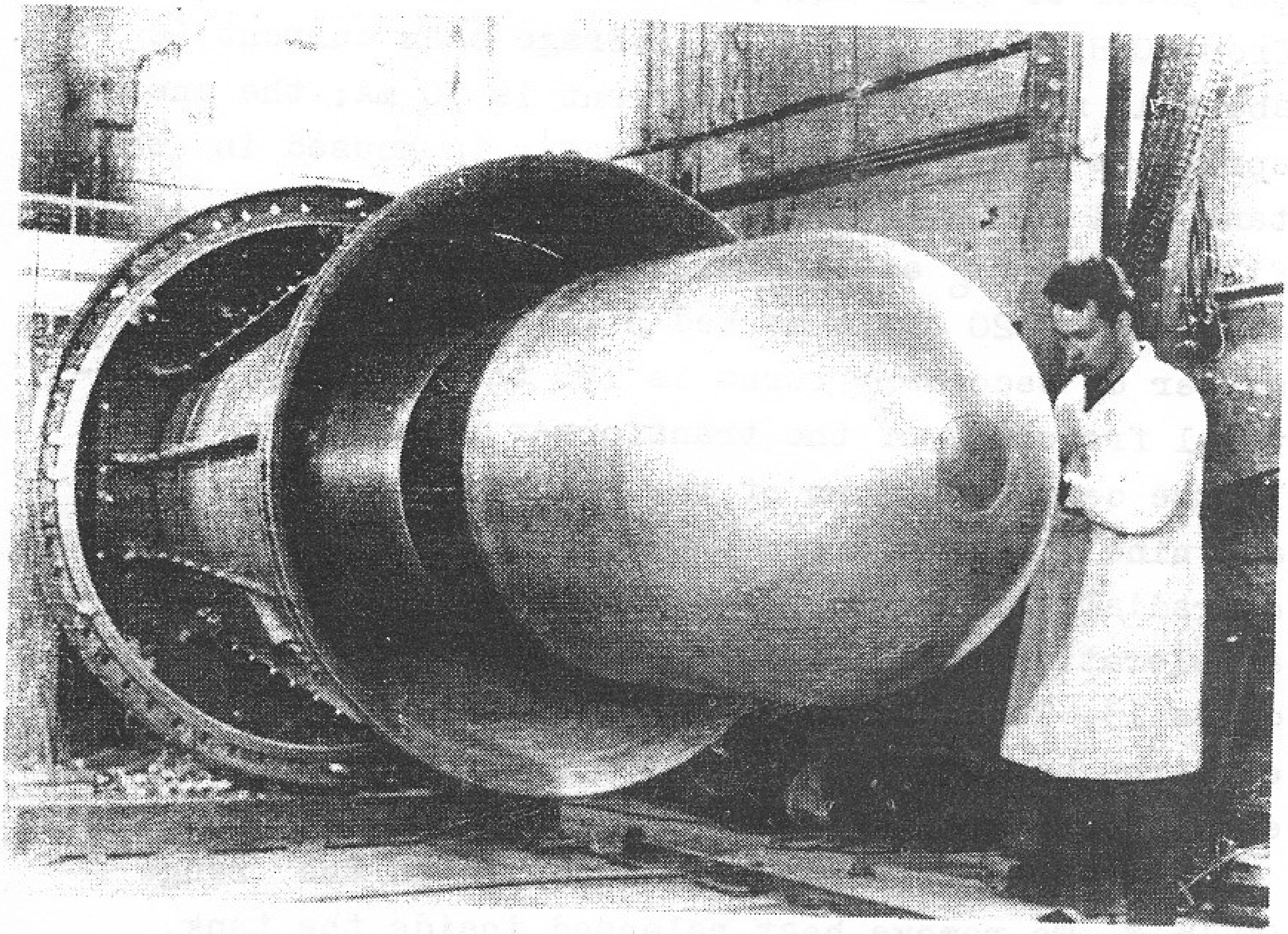

Fig.28. Accelerator RIUS-5. Tank is taken off.

has operated once per 2-5 min, but there are no limitations in principle to considerable reduction of the time interval between pulses. The latter is determined by the postpulse recovery times of the tube vacuum and of the electric strength of the high voltage gap.

The maximum X-radiation obtained to date in the RIUS-5 is 10 $\frac{R}{m.pulse}$. The accelerator operates in a horizontal position. There is an extra gasholder and compressor for gas pumping when the tank is opened.

Industrial frequency TA

ELT-1 (electron transformer) is a single phase TA rated at an energy of 1.3 MeV and average beam output power of 15 kW /18/. Power is supplied directly from 50 Hz mains at 220 V. Average beam current is about 12 mA and the peak current is 70 mA; the energy spread is ± 0.5 %. The accelerator is housed in the tank of 1 m diameter and of 1.3 m length which is filled with SF_6 at 14 atm. The secondary winding consists of 20 coils marked 3 in Fig.29, the total number of secondary turns is 190 thousand and the natural frequency of the transformer is about 50 Hz. In the central column of the magnetic circuit there are nineteen conical cores marked 13 in Fig.29, assembled of radially oriented plates of transformer steel. The acceleration tube 4 is electrically connected to the cores 13. The tube has a tantalum cathode 6 with electron heating and a control electrode. The control electrode signal is about 5 kV.

Power conversion efficiency is in the range 90-95 %. To remove heat released inside the tank, there is a water cooled radiator 18 and cooling fan 21 circulates gas inside the envelope. The tube vacuum is maintained by a 500-liter oil-diffusion pump.

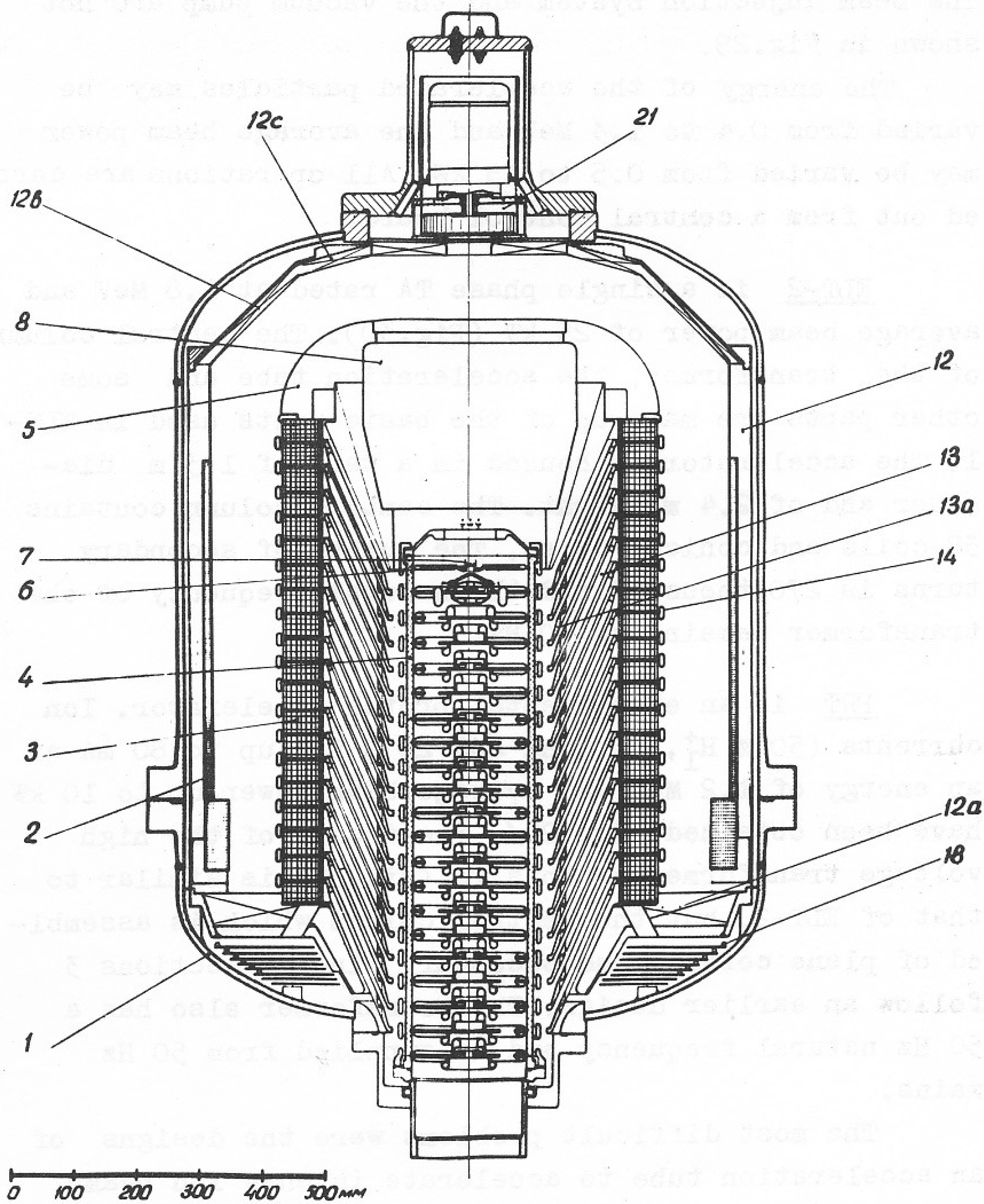

Fig.29. Design of ELT-1. Legend for parts on p.53.

The beam injection system and the vacuum pump are not shown in Fig.29.

The energy of the accelerated particles may be varied from 0.4 to 1.3 MeV and the average beam power may be varied from 0.5 to 15 kW. All operations are carried out from a central control board.

ELT-2 is a single phase TA rated at 1.8 MeV and average beam power of 25 kW (Fig.30). The central column of the transformer, the acceleration tube and some other parts are made up of the basic units used in ELT-1. The accelerator is housed in a tank of 1.3 m diameter and of 2.4 m height. The central column contains 38 coils and conical cores. The number of secondary turns is 270 thousand and the natural frequency of the transformer remains at 50 Hz.

PRT is an experimental proton accelerator. Ion currents (50 % H_1^+, 30 % H_2^+ and 20 % H_3^+) up to 80 mA at an energy of 1.2 MeV and average beam power up to 10 kW have been obtained /25, 26/. The design of the high voltage transformer of this TA (Fig.31) is similar to that of ELT-2, but the central column which is assembled of plane cores 4 and secondary winding sections 3 follow an earlier design. The transformer also has a 50 Hz natural frequency and is supplied from 50 Hz mains.

The most difficult problems were the designs of an acceleration tube to accelerate intense ion beams and of a compact injector power supply system. An ion electron oscillating source is used as an injector (Fig.32). With an extraction voltage of 80 kV the beam contains 50 % H_1^+ at a phase density of about $300 \frac{\text{ma}}{\text{cm.mrad}}$.

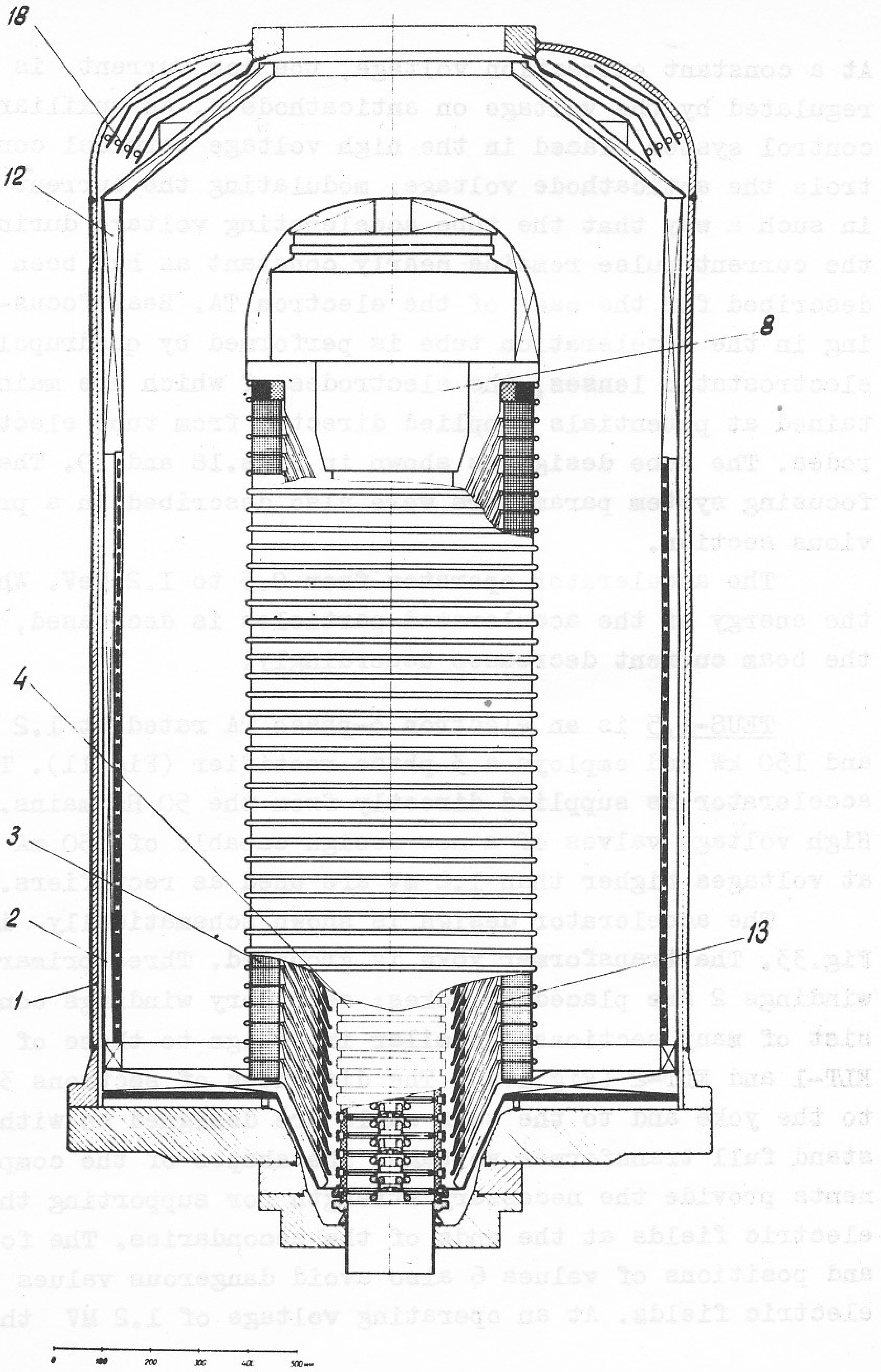

Fig.30. Design of ELT-2. Legend for parts on p.53.

At a constant extraction voltage, the ion current is regulated by the voltage on anticathode 4. An auxiliary control system placed in the high voltage terminal controls the anticathode voltage, modulating the current in such a way that the tube accelerating voltage during the current pulse remains nearly constant as has been described for the case of the electron TA. Beam focusing in the acceleration tube is performed by quadrupole electrostatic lenses, the electrodes of which are maintained at potentials supplied directly from tube electrodes. The tube design is shown in Figs.18 and 19. The focusing system parameters were also described in a previous section.

The accelerator operates from 0.5 to 1.2 MeV. When the energy of the accelerated particles is decreased, the beam current decreases accordingly.

<u>TEUS-1.5</u> is an electron 3-phase TA rated at 1.2 MeV and 150 kW and employs a 3-phase rectifier (Fig.11). The accelerator is supplied directly from the 50 Hz mains. High voltage valves of a new design capable of 150 mA at voltages higher than 1.2 MV are used as rectifiers.

The accelerator design is shown schematically in Fig.33. The transformer yoke is grounded. Three primary windings 2 are placed on yokes; secondary windings consist of many sections 3 similar in design to those of ELT-1 and ELT-2 (Fig.14a). The distances of sections 3 to the yoke and to the tank walls are designed to withstand full transformer voltage. The shapes of the components provide the necessary strength for supporting the electric fields at the ends of the secondaries. The form and positions of values 6 also avoid dangerous values of electric fields. At an operating voltage of 1.2 MV the

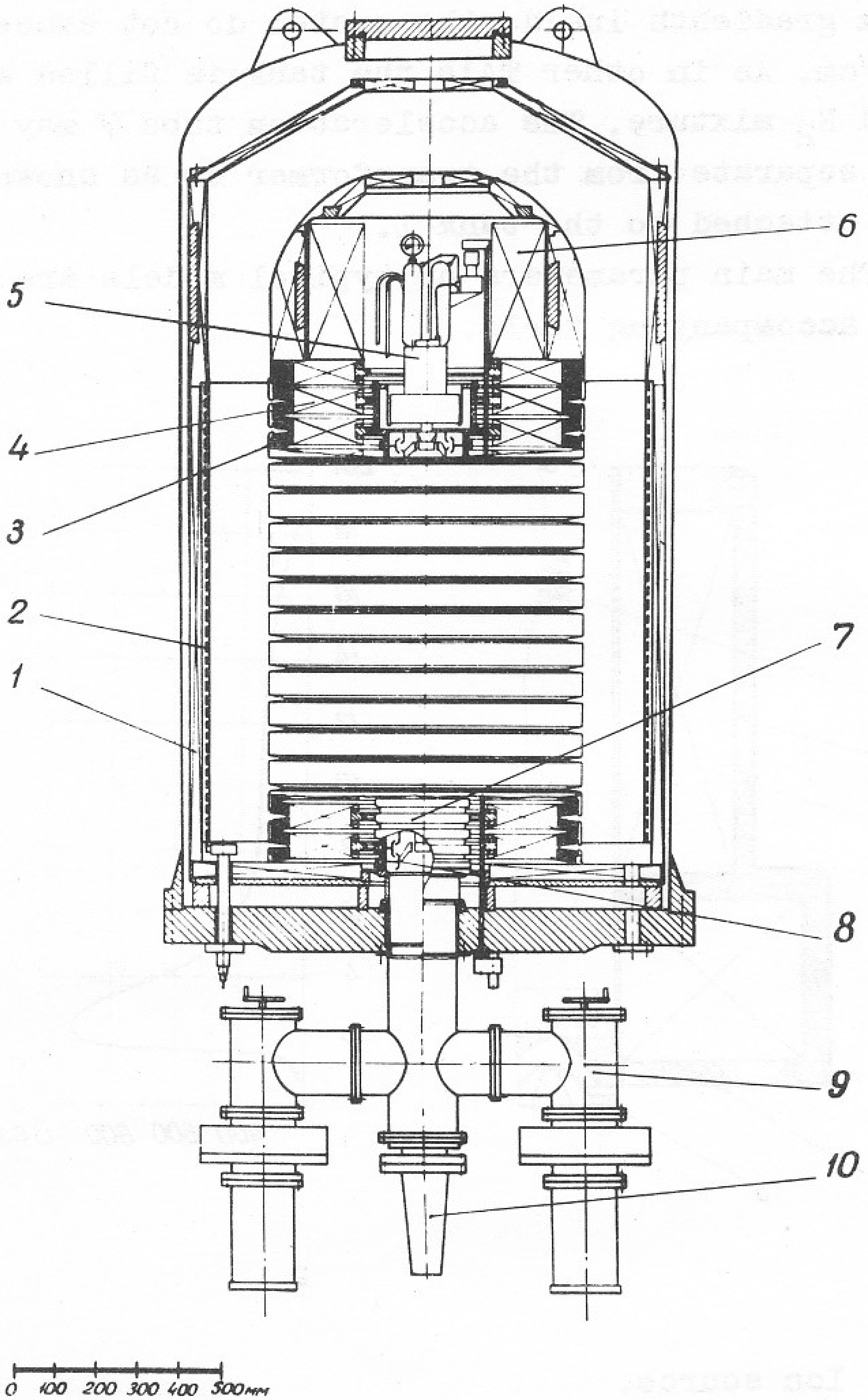

Fig.31. Experimental proton accelerator.
i-outer magnetic circuit; 2-primary winding; 3-sections of secondary winding; 4-central column core; 5-ion source; 6-control system of ion source; 7-acceleration tube; 8-quadrupole lenses; 9-vacuum pumps; 10-pipe to receive current.

maximum gradients inside the system do not exceed 210 kV/cm. As in other TA's the tank is filled with a SF_6 and N_2 mixture. The acceleration tube 7 may be placed separate from the transformer or as shown in Fig.33 attached to the tank 1.

The main parameters of typical models are listed in the accompanying table.

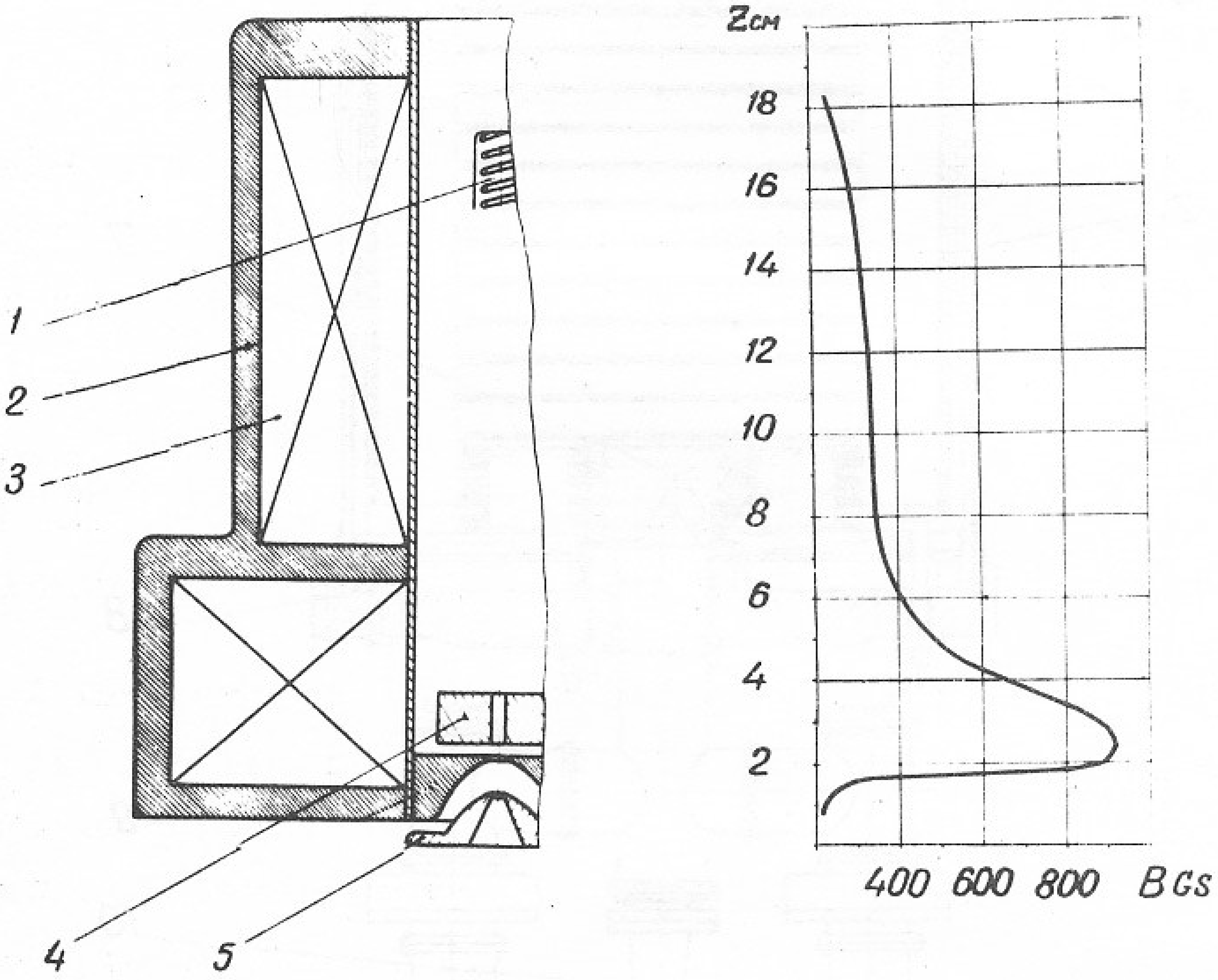

Fig.32. Ion source.

1-cathode; 2-magnetic circuit; 3-coils of the magnet; 4-anticathode; 5-extracting electrode.

Main parameters of typical models

	ELITA-500	ELITA-1	ELITA-1,5	ELITA-3	ELT-1	ELT-2	PRT	TEUS-1,5	RIUS-5
Maximum energy,MeV	0,5	1	1,5	2,5(3)	1,3	1,8	1,2	1,2	5
Average power, kW	1	8	2	10(20)	15	25	10	150	
Maximum current,A	1,5	10(15)	100	20(40)	0,07	0,1-0,12	0,08	0,125	30000
Pulse length, μsec	5	4	0,05-3	10	$6\cdot10^3$	$6\cdot10^3$	$5\cdot10^3$		0,04
Pulse power, kW	$7\cdot10^2$	10^4	$1,5.10^5$	$4.10^4(10^5)$	90	215	95		$1,5.10^8$
Maximum pulse repetition rate,pps	300	300	100	100(300)	50	50	50		one pulse per 2-5min
Power conversion efficiency,	70	70	60	60	90-95	90	70	95	30
Sizes of accelerator (ejection devices not taken into account)									
length, m	0,5	0,55	0,8	1,3	1,3	2,4	2,4	2,5	5,5
diameter,m	0,28	0,38	1,0	1	1	1,3	1,5	2	2
Accelerator weight (power supply system not taken into account), ton	0,04	0,12	0,5	0,8	2,5	7	7	4	5,5

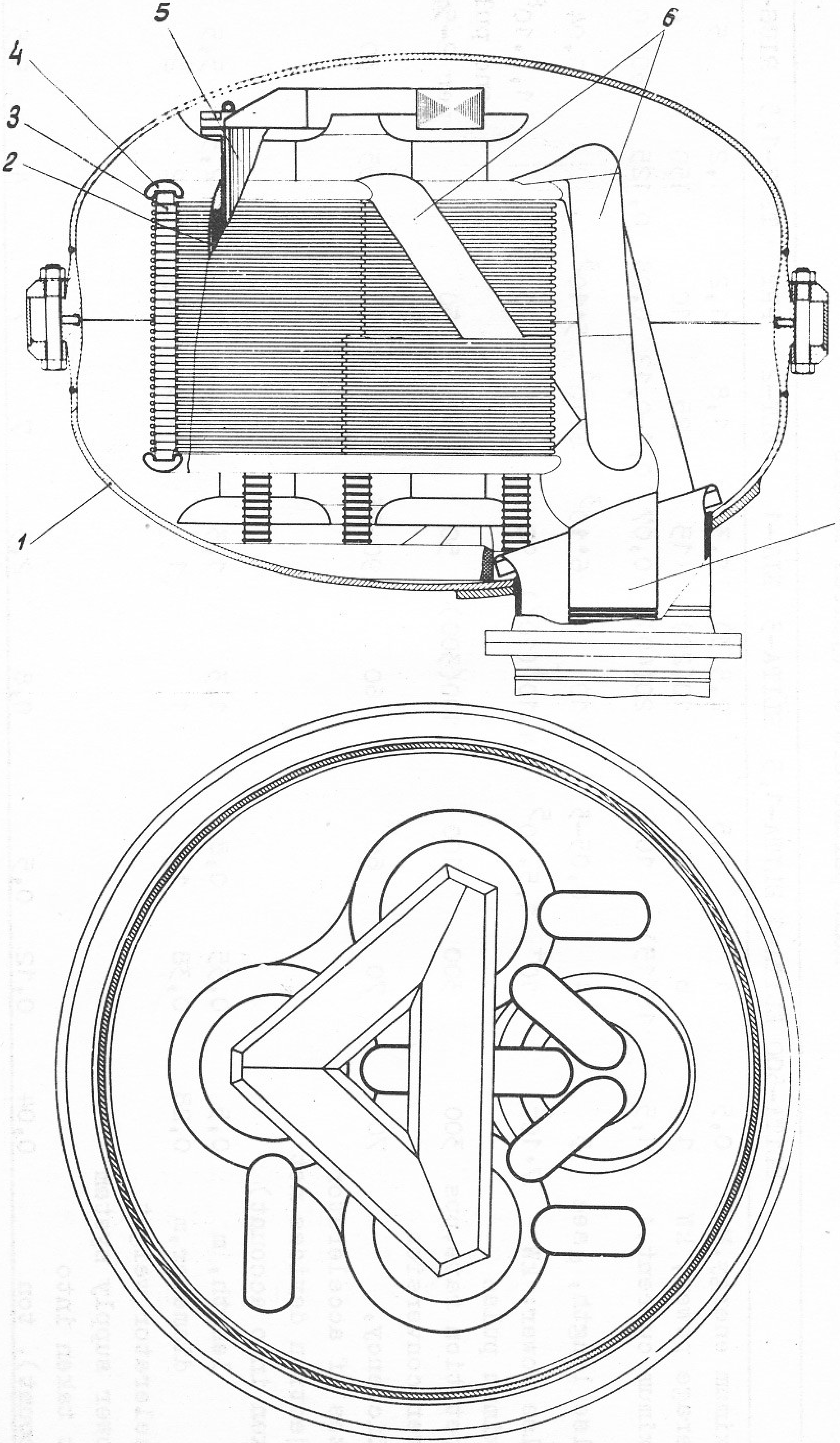
5
4
3
2
6
1
7

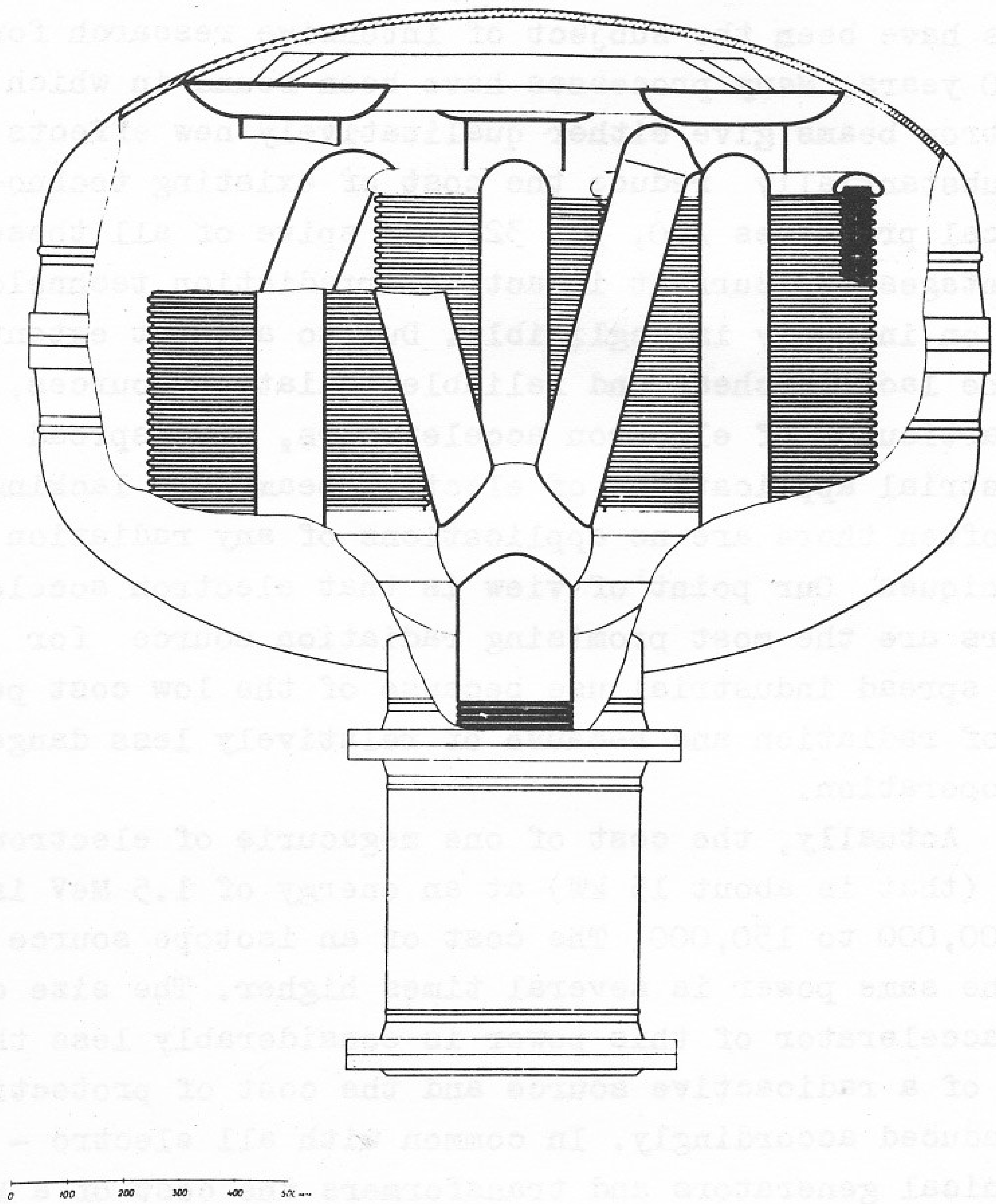

Fig.33. TEUS-1.5.Three phase powered electron accelerator. 1-tank, 2-primary winding, 3-secondary, 4-screen of secondary winding, 5-magnetic circuit, 6-valves, 7-acceleration tube.

6. Uses of high power beams

The various industrial applications of electron beams have been the subject of intensive research for 15-20 years. Many processes have been found in which electron beams give either qualitatively new effects or substantially reduce the cost of existing technological processes /30, 31, 32/. In spite of all these advantages the current impact of irradiation technologies on industry is negligible. Due, to a great extent, to the lack of cheap and reliable radiation sources, in particular of electron accelerators, wide spread industrial applications of electron beams are lacking and often there are no applications of any radiation techniques. Our point of view is that electron accelerators are the most promising radiation source for wide-spread industrial use because of the low cost per kWh of radiation and because of relatively less dangerous operation.

Actually, the cost of one megacurie of electron beam (that is about 15 kW) at an energy of 1.5 MeV is $ 100,000 to 150,000. The cost of an isotope source of the same power is several times higher. The size of the accelerator of this power is considerably less than that of a radioactive source and the cost of protection is reduced accordingly. In common with all electro - technical generators and transformers the cost of a kWh drops with increasing total power of a unit. The cost of a beam kWh from a 150 kW electron accelerator should be 3-5 fold cheaper than the cost of a 15 kW unit. High beam powers would presumably be useful only in large industries with high power consumptions.

Sometimes electron radiation is considered to have limited scope of application because of small depth of penetration $\lambda /\mathrm{cm}/ = \frac{0.35\ E/\mathrm{MeV}/}{\rho\ /\mathrm{g/cm}^3/}$.

For example, for an electron energy of 3 Mev and for a material density $\rho=1$ g/cm^3 material of 2 cm thickness may be treated throughout when it is exposed to the beam from both sides. Experience shows that there are many materials requiring irradiation treatment to less than 2 cm depth. It may be assumed also that the future development of TA's should permit creation of practical units rated at 3-4 MeV with beam power of several hundreds of kW. Provision of an inner target gives such machines a capability of delivering fairly low cost γ-radiation.

The cost of a kWh of electron-beam radiation from an existing apparatus, with capital and current expenditures taken into account, is 5-10 fold cheaper than the corresponding cost of isotopes sources. Besides, the utilization factor of electron beam power as a rule amounts to 0.6-0.9 whereas that of γ-radiation is 0.15-0.3; the result is that electron irradiation is 15-30 fold cheaper.

The efficiency of the entire accelerating facility is $m/\frac{ton}{hour}/ = \frac{1}{3} \cdot \frac{P/kW/}{r/Mrad/} \xi$, where P is a beam power, r is an irradiation dose and ξ is a beam utilization factor. Present-day accelerators can irradiate thousands of tons of industrial production per year. For this purpose machines may be built in a plant production line. Isotope sources turn out to be more economical in irradiating small amount of materials as, for instance, in experimental applications when low radiation fluxes are desired. In a number of cases the irradiation treatment is a by-product of a nuclear reactor. While some of the factors have been listed, a detailed comparison of different irradiation methods is beyond the scope of this report. So far as radiation danger is concerned a great advantage of the TA is the ability to carry out preventive and repair operations in complete absence of radiation. In addition there is less danger of contaminating the irradiated products with radioactive materials.

The numerous applications of low-energy electron accelerators may be divided into four groups: 1) the direct irradiation of materials by accelerated electrons, 2) the utilization of electron flux to deposit concentrated energy for thermal action, 3) electron beam conversion to γ-radiation for radiography and for irradiation of massive objects, and 4) scientific purposes such as the injector for high energy accelerators, production of experimental plasmas, and to excite lasers.

Let us consider the applications of the second type. The energy density obtained in electron beams, both of pulsed and of continuous types, exceeds that of any other known energy flux concentration. Superhigh pulse currents are now the focus of attention of experts in various fields of research and application. Electron beams with energy of 100-200 keV are also extensively used in industrial installations for vacuum melting and welding of metal. With the advent of high current

electron accelerators rated at 0.5-1 MeV the creation of machines producing a continuous electron beam at an energy flux density of 10-20 kW/mm^2 extracted into an air becomes a real possibility. An external beam focused in air may be used for welding and other treatment of large pieces of high melting metals and for cutting and cleaving rocks. Development of portable TA's will permit use of electron beam technology for these purposes. Achievement of continuous external electron beams with such energy densities is technically possible. For this purpose special devices with continuous pumping /33/ or with rotating foil /34/ are being designed. The main problem here is to make these devices portable and reliable enough.

One may expect that after electron accelerators are widely adopted there will be increasing interest in heavy particles accelerators. Economic facilities for acceleration of protons and other heavy particles are quite realizable. Alloy steel production and semiconductor material production are two fields which are likely to utilize fluxes of heavy particles. Powerful proton beams may also be useful as high frequency power generators.

7. Future prospects

The performance parameters of the models which have been described are by no means the upper limits for TA type accelerators. The most interesting directions of TA development are: extending the energy of accelerated particles, extending the power (pulsed and average), reducing the dimensions, increasing the reliability, simplification of designs and of maintenance, and acceleration of heavy particles.

The energy is limited mostly by the electric strength of the acceleration tube and of the secondary winding and by the high voltage gap. In the tube of the latest design the potential gradients are close to 3 MV/m. Finer sectionalization of the tube insulator, use of insulators with smaller dielectric coefficient, strong focusing of the beams to permit reduction of the main channel diameter, and more careful selection of the tube electrode material appear to provide for increasing potential gradients up to 3.5-4 MV/m. To withstand a high voltage pulse length of 10^{-7}- 10^{-8}sec the tube insulator even today may be rated at 8 MV/m.

The potential gradient along the secondary winding of the pulsed TA reaches 3-5 MV/m and of the industrial frequency TA reaches 2 MV/m and higher. The limiting potential gradient at the high voltage gap when the tank is filled with SF_6 at 20 atm is also close to 50 MV/m. In the pulsed TA filled with water, for a pulse length of 10^{-7}- 10^{-8}sec, the highest supportable potential gradients are also about 50 MV/m. The average potential gradients in the high voltage gap are 1.5-2 times smaller than the maximum first of all because of a significant difference in the radii of curvature of the high voltage potential terminal and of the tank. A drastic increase of the potential gradient withstood in the high voltage gap will be obtained only by passing to qualitatively new insulators such as a solid dielectric. Manufacture of a solid insulator withstanding several MV and having the necessarily complicated shape and voltage spacing faces us with considerable technical difficulties today, however.

On the whole, construction of a TA rated at energies in the MeV range with the potential gradients mentioned is technically realizable. Tandems for heavy particle acceleration may be developed from the TA's currently designed.

The average power of a pulsed TA is increased first of all by increasing the repetition rate. As mentioned above the principal limit to decreasing the pulse-to-pulse interval is the time of deionization, so the interpulse interval must be at least 10^{-3}-10^{-4}sec. Thus there is a possibility of raising the repetition rate of beam current pulses up to several kHz. The energy imparted to the beam per pulse increases when the capacitance C_2 and voltage drive of the secondary circuit are increased. The two factors pulse length and injector current must provide then for extracting a great deal of energy. Increase of beam power intensifies problems associated with the power supply and cooling systems. However, the resources to permit increasing the average power of the pulsed TA are enormous. Thus the transformer of the ELITA-3 is capable of providing an average beam power of 300 kW even at a repetition rate of 300 pps and without any change in geometry. (The maximum ELITA-3 pulse energy is 1 kJ). Such a drastic increase of power would considerably complicate power supply and cooling system design and necessitate improvement of vacuum and electron optics to minimize the electron current to the tube electrodes.

In a single pulse TA a considerable increase of pulsed power may be obtained when water is used as a dielectric. The specific resistivity of water purified by special means is 1-2,5$\cdot 10^7$ ohm.cm and its ε is about 80. Energy of about 1 MJ is stored in 1 m^3 of water at a potential gradient of 50 MV/m. The wave impedance of the secondary circuit is small enough so that the energy may be delivered in less than 10^7 sec. When the high voltage gap is 10 cm the charging time of the secondary capacitance may be larger than 10^{-6} sec. This time considerably increases when the potential gradient in water is decreased to 30 MV/m /16/. The main problems here are to provide the accumulating capacitance of the primary circuit which should be able to release its energy to the transformer during 10^{-6}-10^{-5} sec, or alternatively to increase the water dielectric strength at greater pulse lengths.

Work is underway also to improve the performance of existing machines with gas insulation; it is possible to increase their power conversion efficiency and to reduce the pulse-to-pulse interval. The former may be achieved by improving the high voltage gap breakdown conditions at the moment of voltage supply to the tube. For this purpose it is necessary to have a wide spark channel reducing the spark resistance in the gas and the accompanying energy loss. The most promising way to increase the width of the spark channel is to fire the gap with a wide auxiliary 0,5-1 MeV electron beam. This beam may be produced by a compact single pulse TA built in the high voltage electrode.

A train of two or more pulses with short pulse-to-pulse intervals is possible if there are several separate capacitor banks in the primary circuit. The pulse-to-pulse time is determined by the combination of the postpulse recovery of the tube vacuum and the recovery of the high voltage gap electric strength.

The power of a single phase TA can be increased by the same means used in ordinary power distribution transformers. A decrease in dimensions is provided by increasing the frequency up to 400 Hz. As mentioned, at higher powers 3-phase TA's are most practical. Their power, in principle, is not limited and the only limiting elements are the high voltage rectifiers and the acceleration tubes. Development of high voltage rectifiers promises to provide some rated at several MV and at currents of tens of amperes which will provide rectification of several thousands of kW.

Acceleration tubes with electron beams of thousands and of tens of thousands of kW can seemingly also be manufactured. Electron optics have been described in the section "Acceleration tubes" which permit acceleration of electron currents of tens of amperes. These schemes have been proven to be efficient by experiment. The minimum particle impingement of the tube electrodes is obtained by increasing the focusing properties of the system, by suppression of secondary particle acceleration and by vacuum improvement. The power conversion coefficients of high power 3-phase TA's should exceed 95 %.

One way to reduce the dimensions of a pulsed TA with gas insulation is to decrease the high voltage acting time. In machines of small dimensions the natural frequencies may exceed 1 MHz. The increase of electric strength to pulses permits increasing the potential gradients both inside the transformer and inside the acceleration tube and reduction of the TA dimensions. For short pulses it may turn out to be reasonable to use oil insulation.

Simplification of design and maintenance of TA's will be achieved first of all by using sealed-off acceleration tubes. The pulsed TA design is extremely simple, but these machines have rectifiers, commutators and power supply components. Single phase and 3-phase TA's can be supplied directly from industrial mains, but they have iron yokes and are larger than pulsed ones. The pulsed accelerators are advantageous when it is necessary to have a compact TA with as high energy as possible. Industrial frequency TA's are advantageous when it is necessary to have high power and high power conversion efficiency.

With the simplicity of TA's goes their reliability. Operating experience with a number of TA's over a few years has proved their high reliability. Cathode lifetime is about 500 hours and the acceleration tube lasts 3-4 thousand hours. The other TA components have considerably greater lifetime. But the replacement of cathodes and acceleration tubes is simple enough. Manufacture of TA's on a production basis justifies quite thorough checks on reliability to be made. The transformers described can be used without any changes for heavy particle acceleration. The main difficulties are connected with focusing in the acceleration tube and with providing compact ion sources and power supply to them. The principles of ion focusing described in this work are used in the design of an experimental proton accelerator. Its successful operation shows that intense ion beams can be accelerated economically.

We would like to point out in conclusion that many details have been omitted in this paper. The description of power supply systems and of calculational and experimental methods may be found in the publications of participants in this work. The main publications are included among the references.

The author would like to express his deep appreciation to Professor Gersh I.Budker who provided encouragement and interest throughout the work. He would like also to express his deep appreciation to all the contributors who took part in the TA project.

References

1. M.Cleland et al. Nucleonics 8 (1960) 52.
2. E.Abramyan, Nucl. Instr. and Meth. 59(1968) p.22.
3. Radiation sources, ed.A.Charlesby, Pergamon Press, 1964, p.171.
4. E.Koltay. Phys.Letters, 4, No.2 (1963) p.66.
5. E.Abramyan and V.Gaponov, Atomn. Energ.22 (1967).
6. E.Abramyan and S.Vasserman, Atom. Energ. 23(1967).
7. G.Breit et al, Phys. Rev. 35, 51 (1930).
8. W.Heise, Electrotech. Zeitschrift A-1 (1964).
9. E.Abramyan et al, Large radiation sources for industrial processes, Intern. at. en. agency, Vienna (1969), p.666.
10. E.Abramyan et al, Electron accelerators, Energia, Moscow (1968) p.365.
11. A.Egorov et al, Pribory i technika experimenta (USSR) 4(1968) p.26.
12. E.Abramyan et al, Doklady Academy of Sciences USSR 192, no.1 (1970).
13. E.Abramyan and V.Gaponov, Apparatus for particle acceleration, Soviet patent no.208144, England 1121467, France 1457989, Japan 501942, Sweden 315964, 315965, USA 3390303, W.Germany 1514036.
14. E.Abramyan and V.Gaponov, Atomn. Energ.20(1966).
15. E.Abramyan et al, Charged particle accelerator, Soviet patent no.1025550, Canada 792864, England 1163522, France 1493124, Italy 776314, Sweden 226962, Switzerland 465075, USA 3450996.
16. V.Kapitonov et al, Zh. Pricl. Mech. Techn. Phys. (USSR) 2(1970).
17. O.Pecherski et al, Doklady Academy of Sciences USSR 192, no.6 (1970).

18. E.Abramyan et al, Large radiation sources for industrial processes, Intern.at.en.agency, Vienna (1969) p.661.
19. V.Zukerman and M.Manakova, JETP 27 (1957).
20. T.Martin, JEEE Trans.Nucl.Sc. NS-16, no.3 (1969).
21. E.Abramyan et al, Electron accelerators, Energia, Moscow (1968) p.377.
22. E.Abramyan et al, Atomn.Energ. 25 (1968).
23. V.Vecheslavov and V.Kononov, JETP 39 (1969).
24. E.Abramyan et al, JETP 38 (1968).
25. E.Abramyan et al, Atomn.Energ. 29 (1970).
26. E.Abramyan and V.Vecheslavov, Atomn.Energ.22(1967).
27. V.Zakharov and M.Rabinovich, JETP, 34 (1964).
28. L.Purser et al. Rev.Scient.Instr. 36 (1965).
29. V.Vecheslavov and V.Kononov, Atomn.Energ.25(1968).
30. Massive Radiation Techniques, George Newnes Lim., London.
31. A.Gale, Nuclear Fair "Nuclex-66" Basle, Switzerland (1966).
32. E.Finkel et al, Radiation chemistry and cabel technique, Atomizdat, Moscow (1968).
33. B.Schumacher, The South Afr.Min. and Eng. J. January 3, (1969).
34. E.Abramyan and I.Chertok, Pribory i technika experimenta (USSR) 6(1969).

CONTENTS

Ответственный за выпуск Е.А.Абрамян
Подписано к печати 25.У.I970 г.
Усл. 4 печ.л., тираж 300 экз.
Заказ № 3I, бесплатно. ПРЕПРИНТ

Отпечатано на ротопринте в ИЯФ СО АН СССР.